MODERN STEEL KITCHEN TAP

PRODUCT INFORMATION

Article title	Villeroy & Boch Modern Steel Kitchen tap, of Stainless steel, Solid stainless steel
Article number	966801LC
Assembly / Assembly type	Pillar tap
Assembly instructions	Tap fitting can be installed directly in front of a wall as the water temperature is regulated within a 90° range towards the sink
Scope of delivery	1 x tap fitting , 1 x set of connecting hoses 1 x fastening set 1 x installation instructions 1 x care tips
Length in mm	243
Width in mm	45
Height in mm	315
Collection	Modern Steel
Material	Stainless steel
surface	matt
Colour name	Solid stainless steel
Technical information	Material: solid stainless steel, | Cartridge material: plastic, ceramic gaskets||Swivel range: 360°|| Opening angle of lever: 25°||Tap can be installed directly in front of a wall as the water temperature is regulated within a 90° range towards the sink||Flow volume comfort jet: 11.5 l/min||Flexible connection hoses, length 600 mm
Length of spout in mm	200
Colour designation	Solid stainless steel
Low pressure	No

TECHNICAL DRAWINGS

966801LC

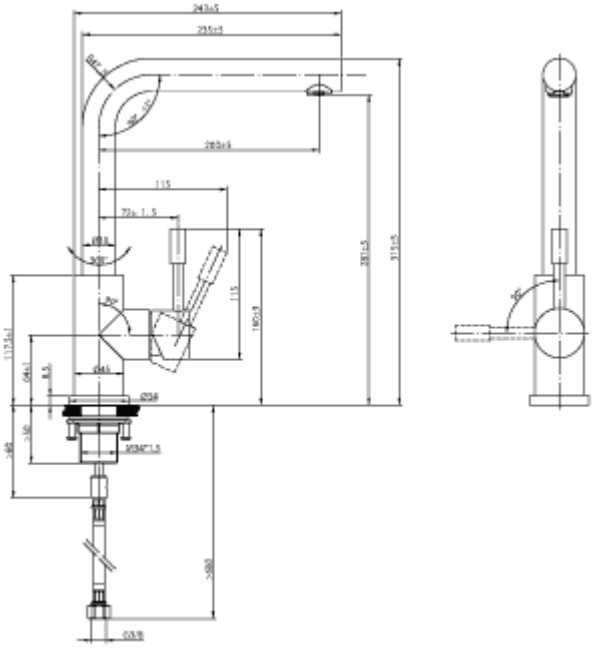
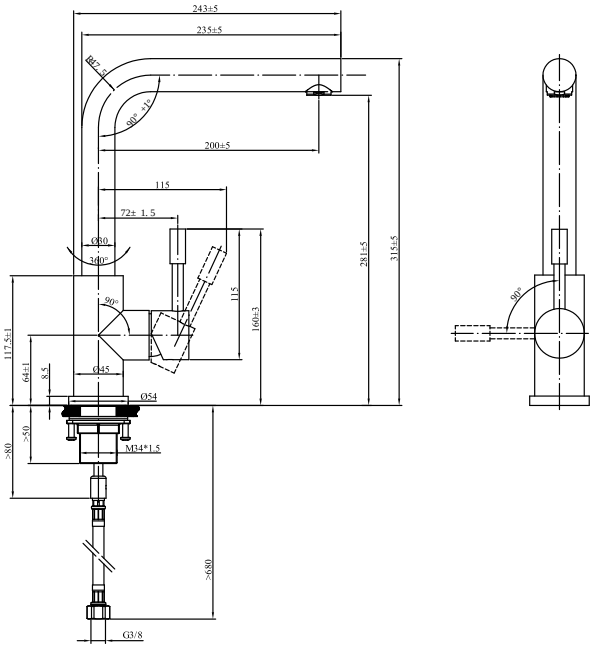
966801LC