# SUBWAY 60 XR BUILT-IN SINK RECTANGLE

## PRODUCT INFORMATION

| | |
|---|---|
| Article title | Villeroy & Boch Subway 60 XR Built-in sink, included Waste system pop-up |
| Article number | 672102H9 |
| Assembly / Assembly type | surface-mounted installation |
| Assembly instructions | minimum unit width: 60 cm |
| Scope of delivery | 1 x sink , 1 x pop-up waste system<br>1 x cover cap, round |
| Interior depth | 200 |
| Collection | Subway 60 XR |
| Position of main bowl | Basin on right |
| Function of the drain fitting | pop-up waste system |

# TECHNICAL DRAWINGS

**672102H9**

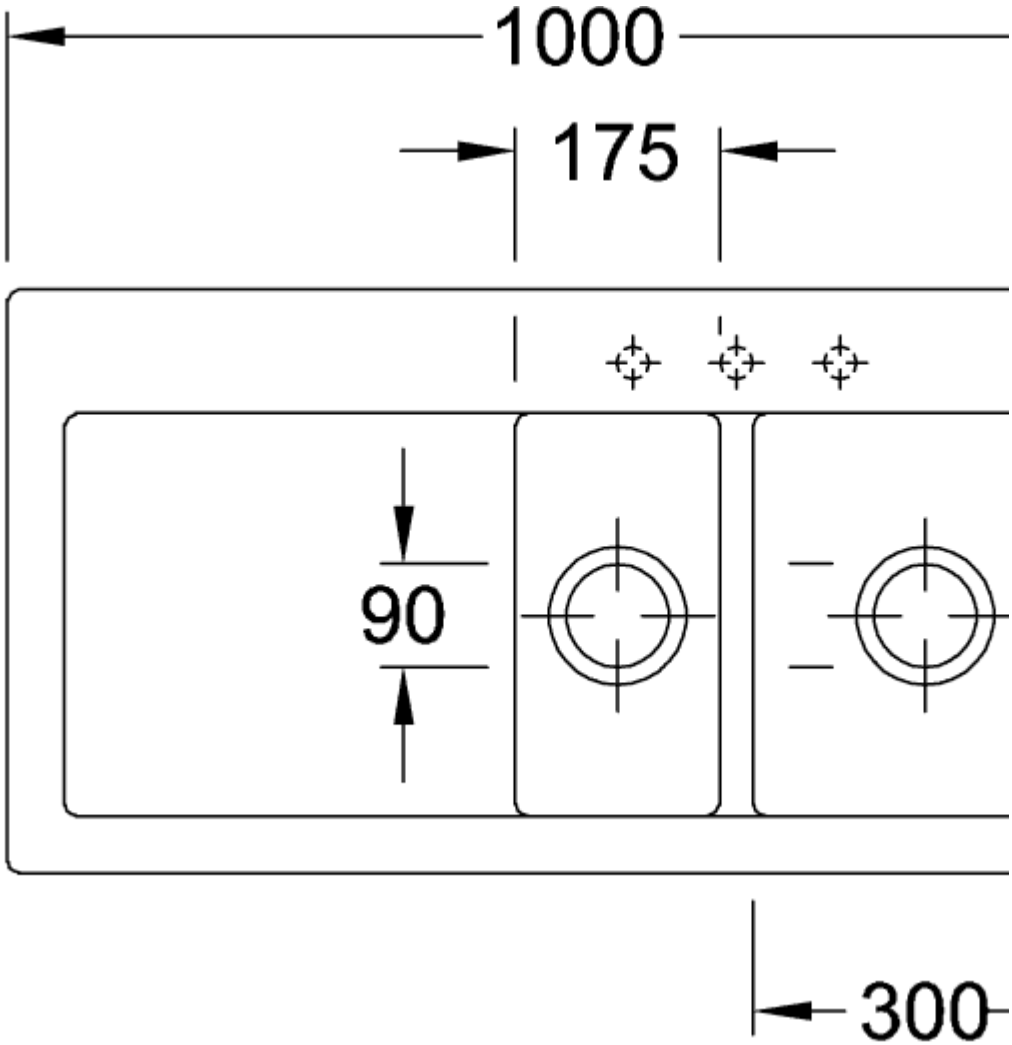
1000
175
90
300

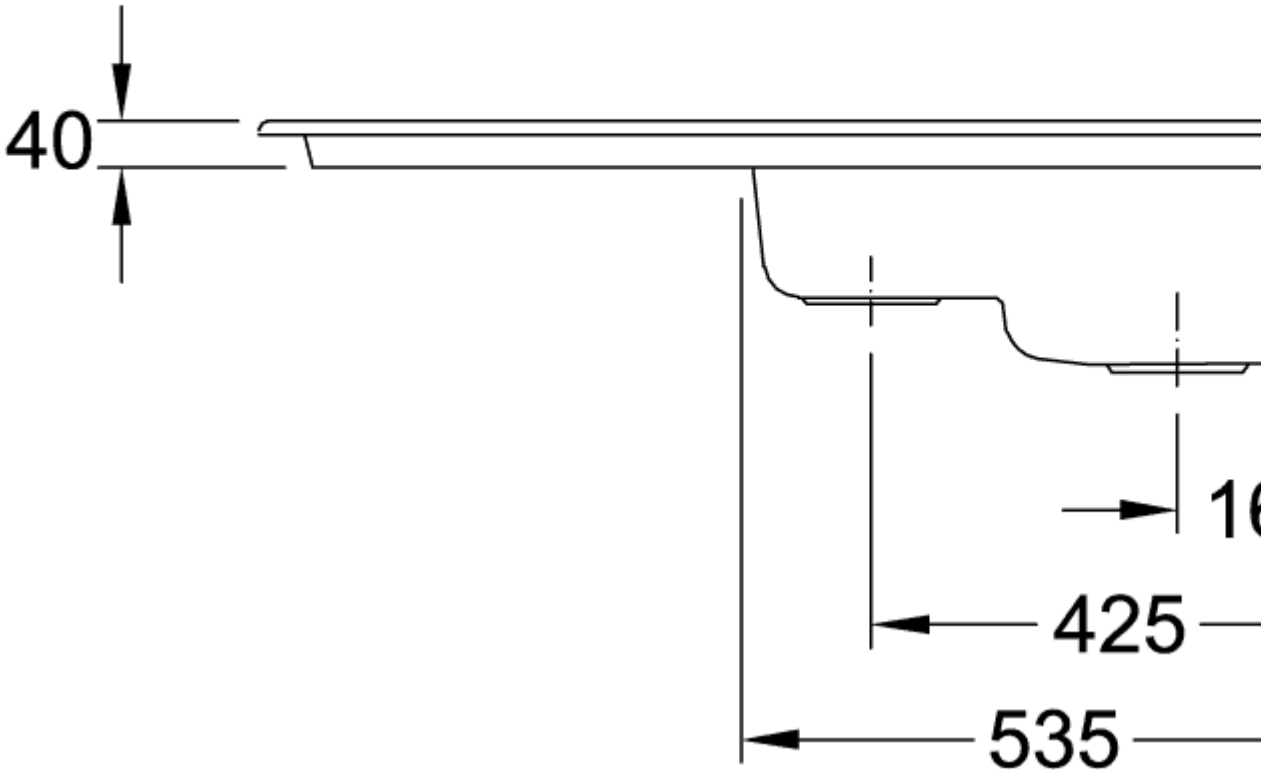
40
425
535
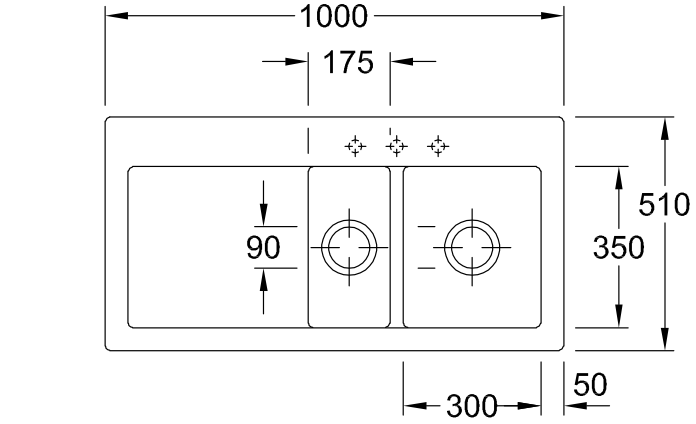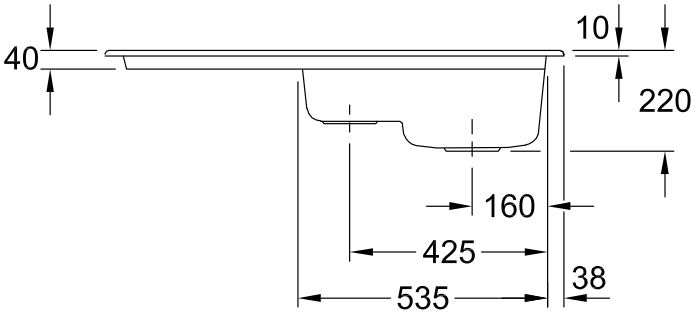
**672102H9**