NEW WAVE 60 BUILT-IN SINK SPECIAL SHAPE

PRODUCT INFORMATION

Article title	Villeroy & Boch New Wave 60 Built-in sink, included Strainer bowl, Waste system pop-up, Espresso glossy
Article number	671602KS
Assembly / Assembly type	surface-mounted installation
Assembly instructions	minimum unit width: 60 cm
Scope of delivery	1 x sink , 1 x pop-up waste system 1 x cover cap, round
Interior depth	185
Collection	New Wave 60
Colour name	Espresso glossy
Position of main bowl	Basin, reversible
Function of the drain fitting	pop-up waste system

TECHNICAL DRAWINGS

671602KS

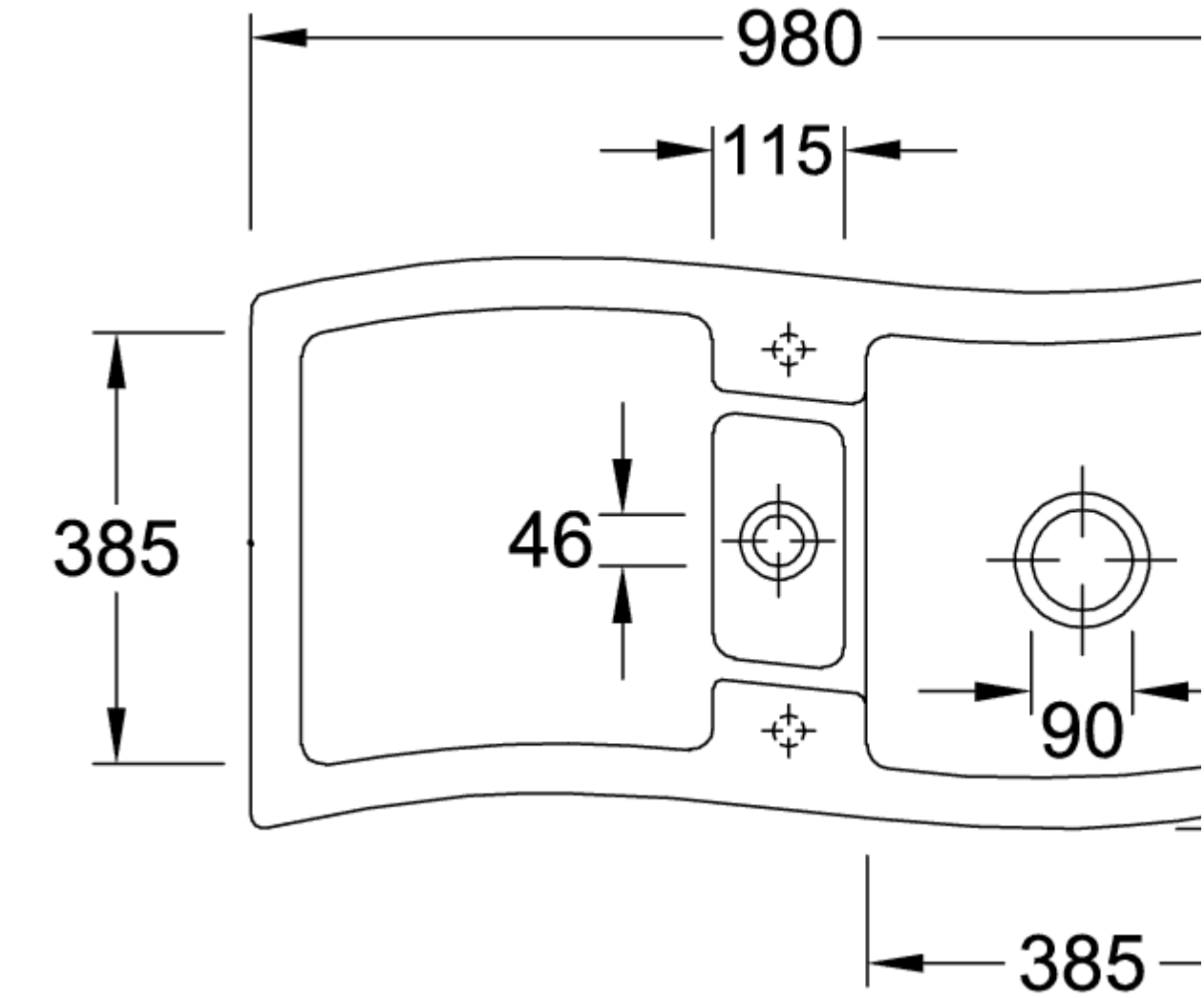
980
115
385
46
90
385

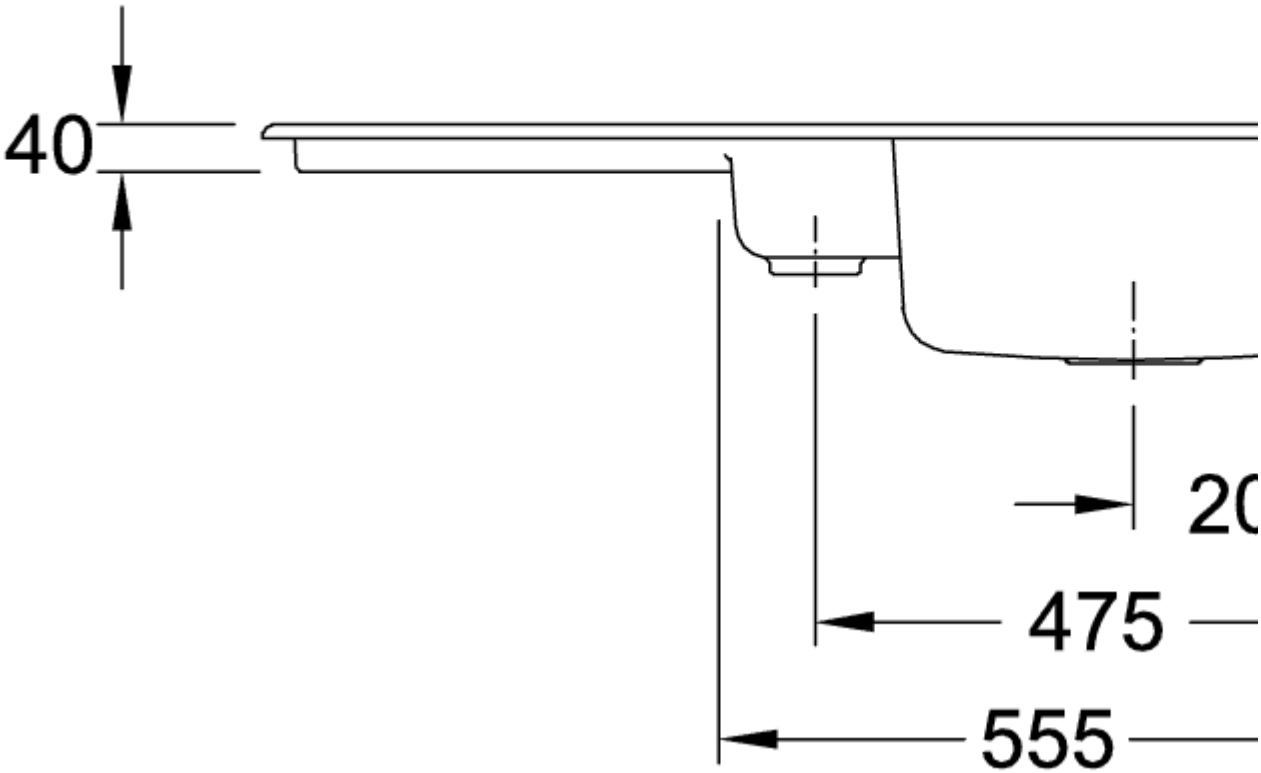
40
20
475
555
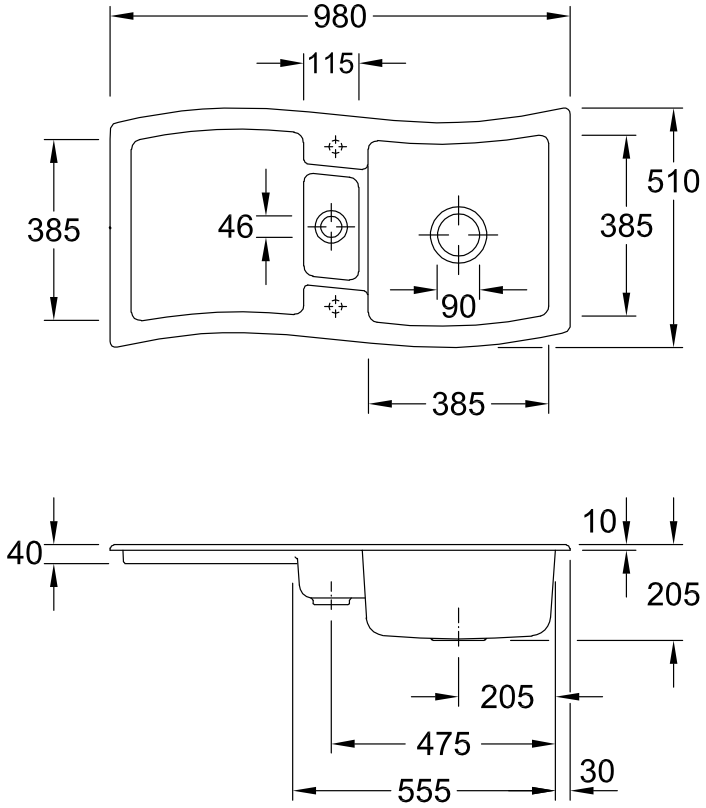
671602KS