CISTERNA 60C UNDERCOUNTER SINK RECTANGLE

PRODUCT INFORMATION

Article title	Villeroy & Boch Cisterna 60C Undercounter sink, included Waste system pop-up, Fastening set, Espresso glossy
Article number	670602KS
Assembly / Assembly type	Undercounter
Assembly instructions	Installation in natural stone or artificial stone countertops, minimum unit width: 60 cm
Scope of delivery	1 x sink , 1 x pop-up waste system 1 x cover cap, round 1 x fastening set
Interior depth	180
Collection	Cisterna 60C
Colour name	Espresso glossy
Position of main bowl	Basin centred
Function of the drain fitting	pop-up waste system

TECHNICAL DRAWINGS

670602KS

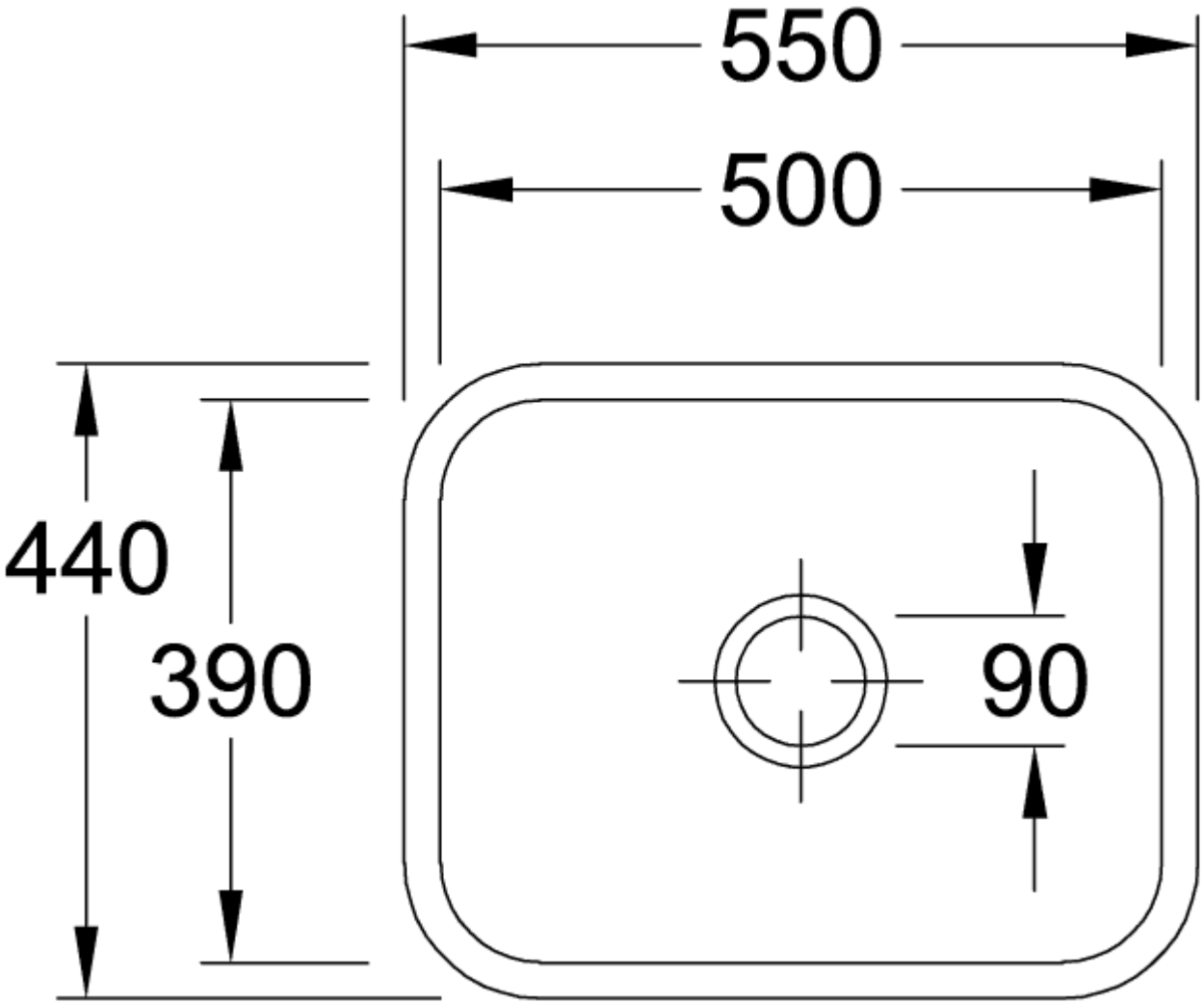
550
500
440
390
90

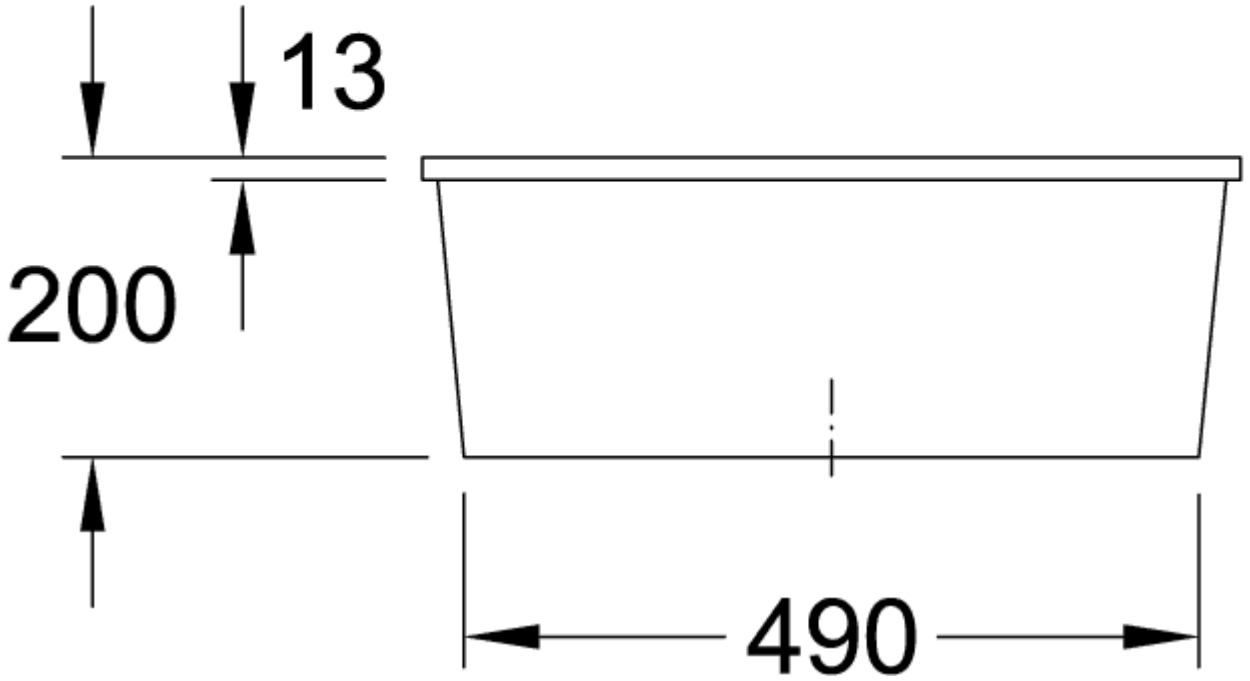
13
200
490
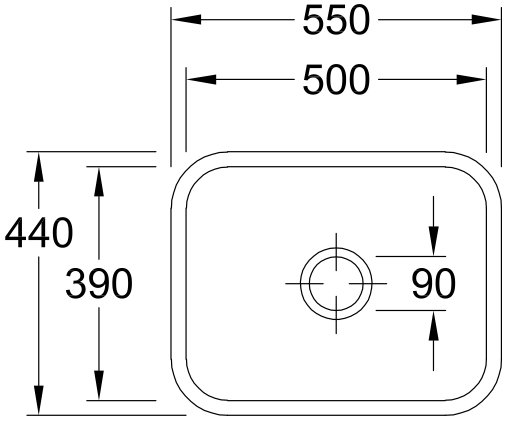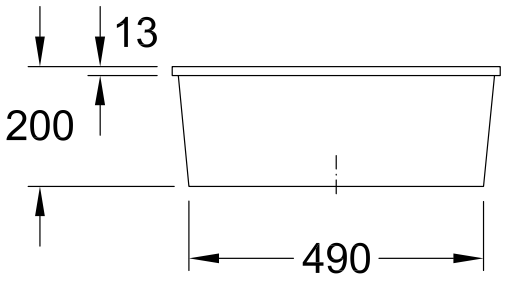
670602KS