# CISTERNA 50 UNDERCOUNTER SINK SQUARE

## PRODUCT INFORMATION

| | |
|---|---|
| Article title | Villeroy & Boch Cisterna 50 Undercounter sink, included Waste system hand-operated, Fastening set, Espresso glossy |
| Article number | 670301KS |
| Assembly / Assembly type | Undercounter |
| Assembly instructions | Installation in natural stone or artificial stone countertops, minimum unit width: 50 cm |
| Scope of delivery | 1 x sink , 1 x basket strainer waste 1 x fastening set |
| Interior depth | 180 |
| Collection | Cisterna 50 |
| Colour name | Espresso glossy |
| Position of main bowl | Basin centred |
| Function of the drain fitting | basket strainer waste |

# TECHNICAL DRAWINGS

**670301KS**

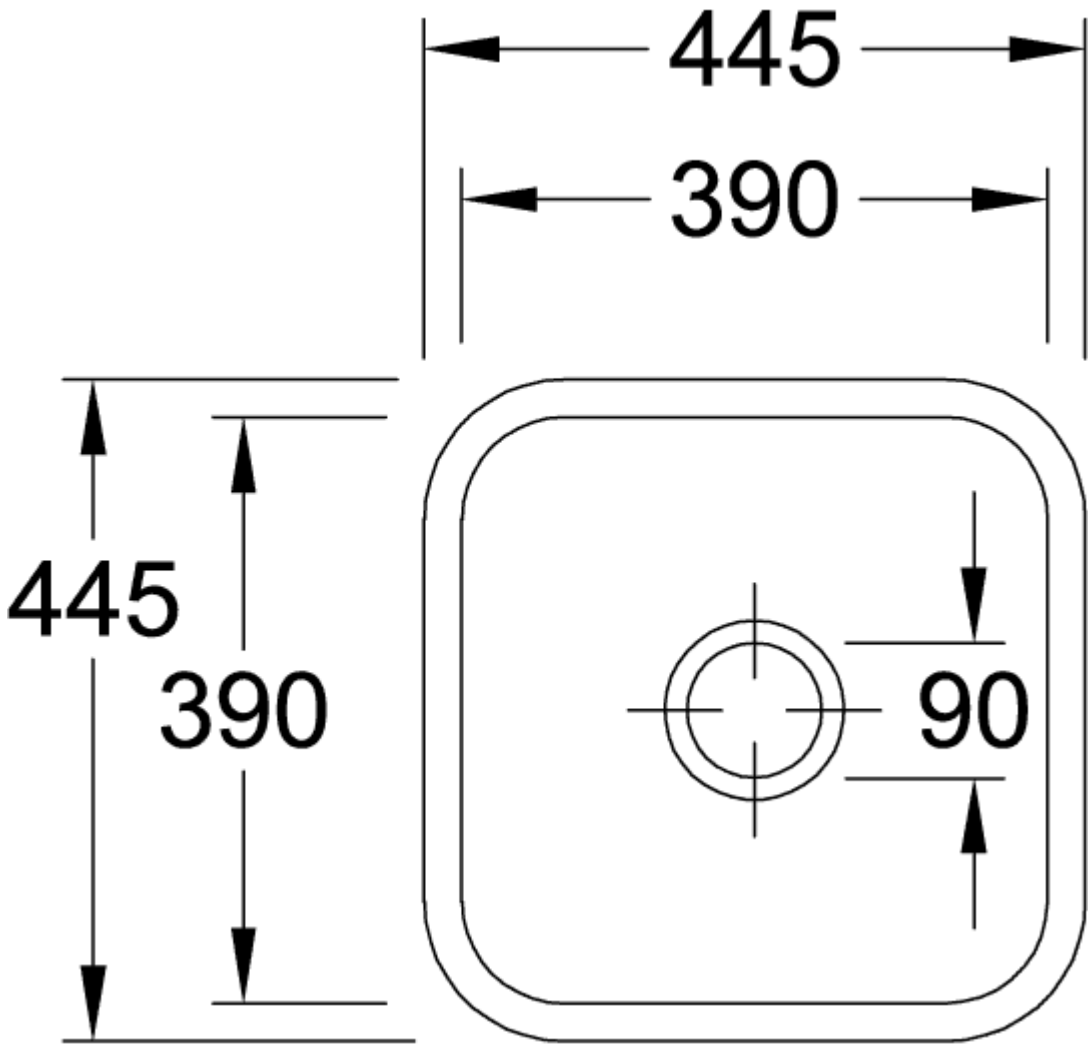
445
390
445
390
90

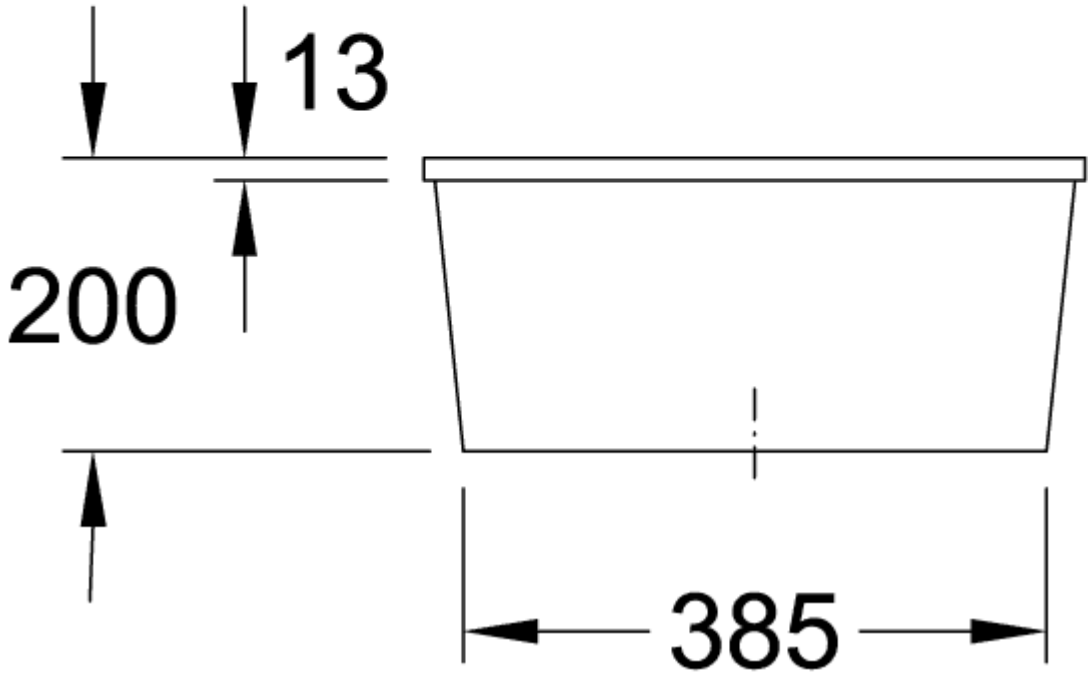
13
200
385
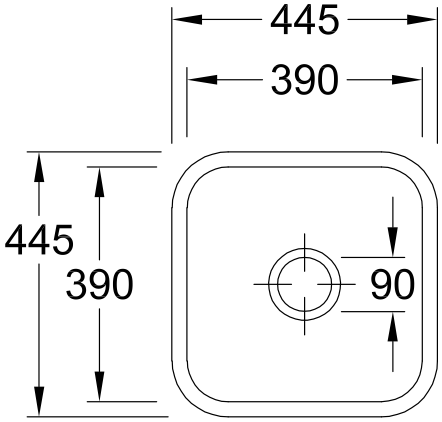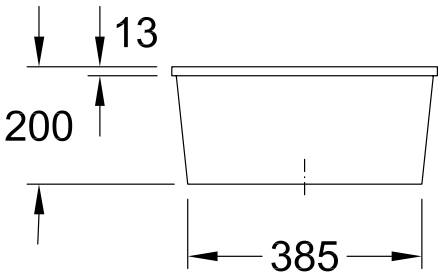
**670301KS**