O.NOVO SQUARE SHOWER TRAY SQUARE

PRODUCT INFORMATION

Article title	Villeroy & Boch O.novo Square shower tray, 900 x 900 x 60 mm, White Alpin
Article number	UDA0906DEN1V-01
Assembly / Assembly type	Surface-mounted, Corner installation|flush-fitting installation| Installation on a base
Assembly instructions	The installation height of the shower tray can be reduced by 30 mm if the Viega outlet fitting art. no. 634 100 is used. Please note: this outlet fitting does not conform to EN 274.
Scope of delivery	1 x square shower tray
Length in mm	900
Width in mm	900
Height in mm	60
Interior depth	60
Collection	O.novo
Material	Acrylic
Colour name	White Alpin
Shape	Square
Colour designation	White Alpin
Antibacterial surface (with AntiBac)	No
Easy surface cleaning (CeramicPlus)	No
With slip resistance	No

TECHNICAL DRAWINGS

UDA0906DEN1V-01

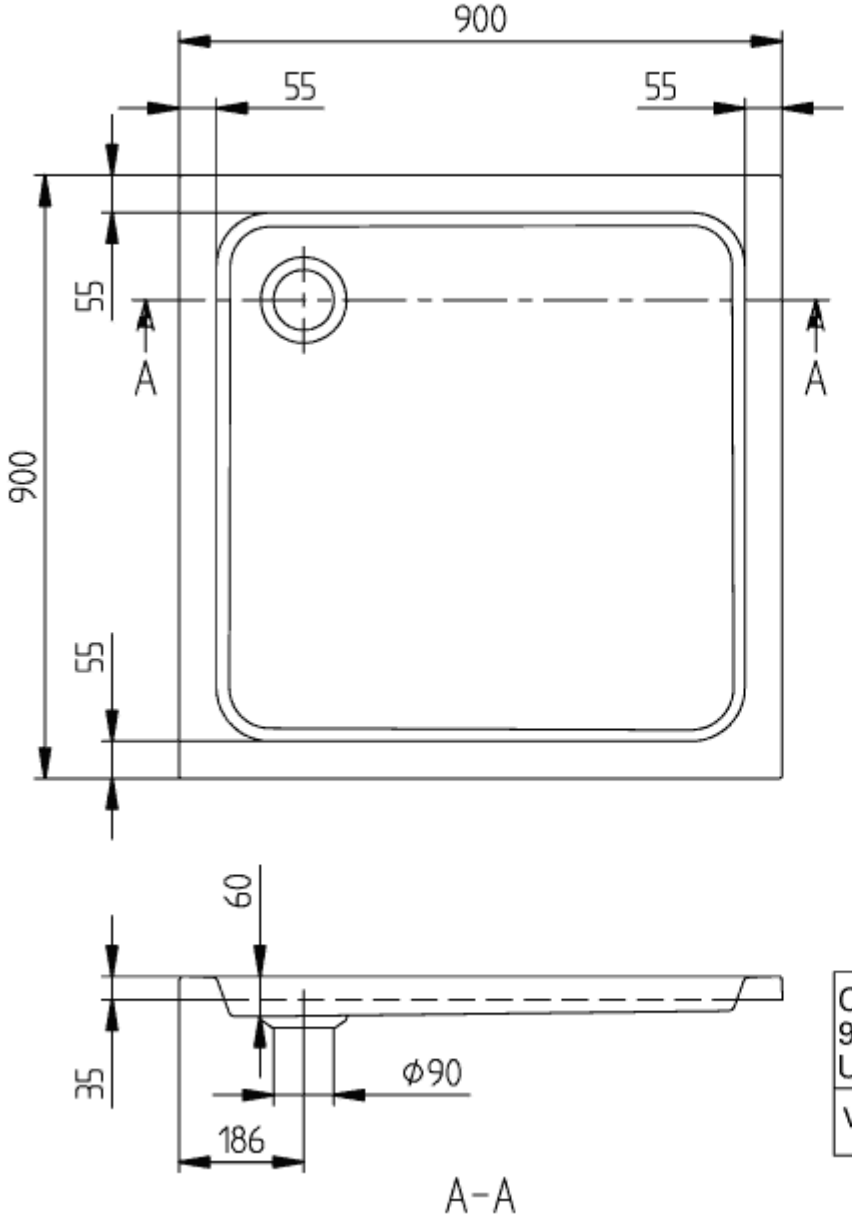

O.NOVO 900x900 UDA0906DEN1	Vill
V02 / 31-03-2021	
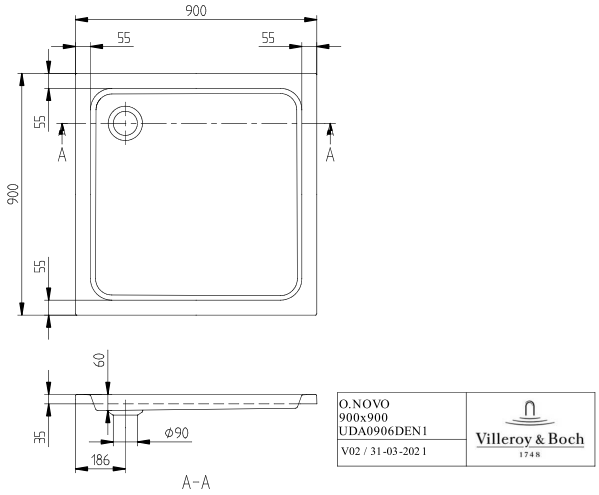
UDA0906DEN1V-01