THEANO FREE-STANDING BATH FREE-STANDING

PRODUCT INFORMATION

Article title	Villeroy & Boch Theano Free-standing bath Original Edition ColourOnDemand, 1750 x 800 mm, Stone White
Article number	UBQ175ANH7F2BCV-RW
Assembly / Assembly type	freestanding
Scope of delivery	1 x free-standing bath
Length in mm	1750
Width in mm	800
Height in mm	506
Interior depth	480
Collection	Theano
Material	Quaryl®
Colour name	Stone White
With overflow	No
Number of people	2
Shape	Free-standing
Colour designation	Stone White
With slip resistance	No
Outlet / outlet	central outlet
Interior form	oval
SilentFlow	No

TECHNICAL DRAWINGS

UBQ175ANH7F2BCV-RW

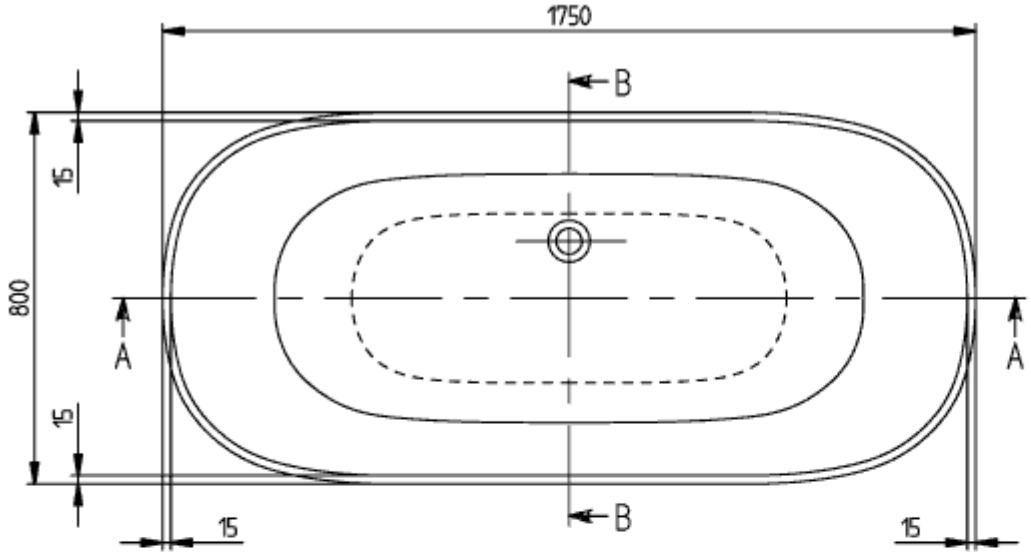

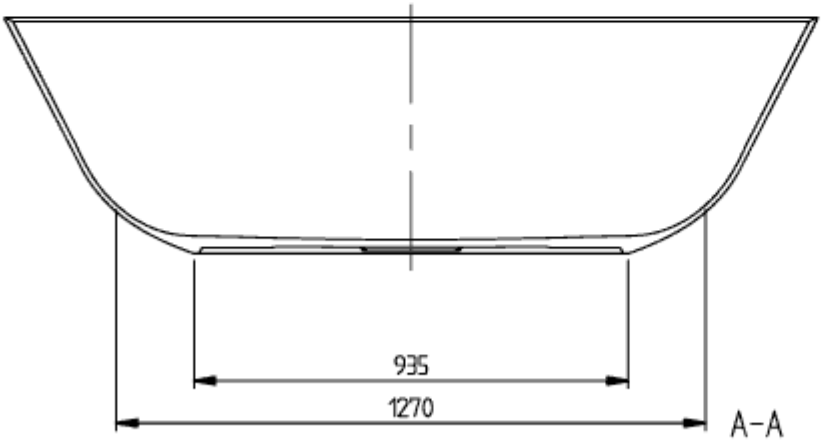

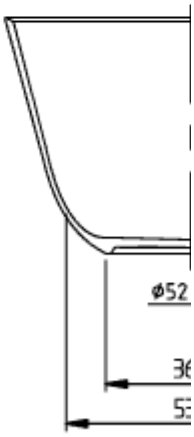

THEANO 1750x800
UBQ175ANH7F2

V01 / 04-02-2020
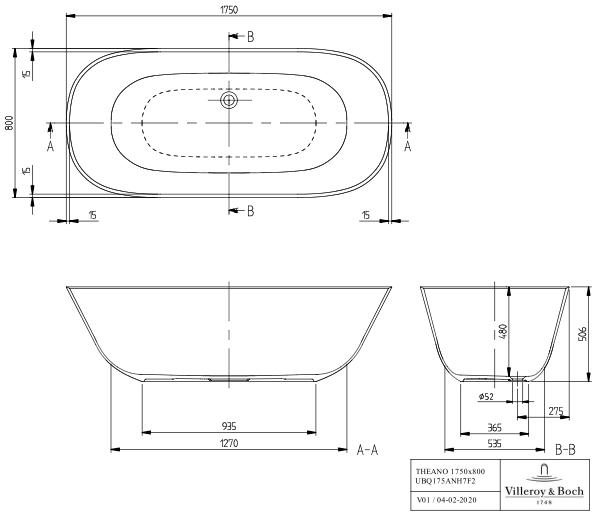
UBQ175ANH7F2BCV-RW