LOOP & FRIENDS OVAL BATH OVAL

PRODUCT INFORMATION

Article title	Villeroy & Boch Loop & Friends Oval bath SQUARE, 1800 x 800 mm, White Alpin
Article number	UBA180LFS7V-01
Assembly / Assembly type	built-in installation
Scope of delivery	1 x oval bath
Length in mm	1800
Width in mm	800
Height in mm	465
Interior depth	440
Collection	Loop & Friends
Material	Acrylic
Colour name	White Alpin
With overflow	Yes
Number of people	2
Shape	Oval
Colour designation	White Alpin
With slip resistance	No
Outlet / outlet	central outlet
Interior form	rectangular
SilentFlow	No

TECHNICAL DRAWINGS

UBA180LFS7V-01

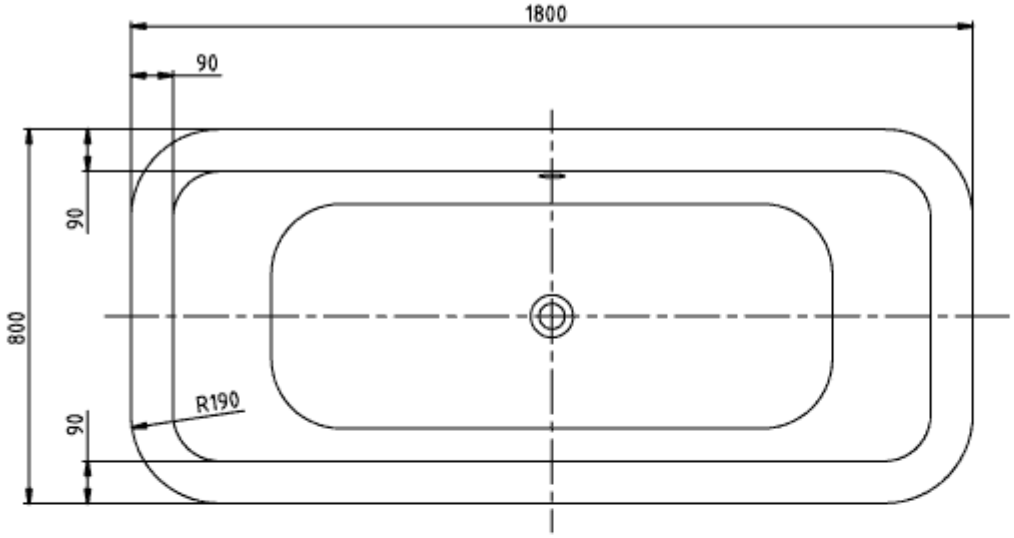

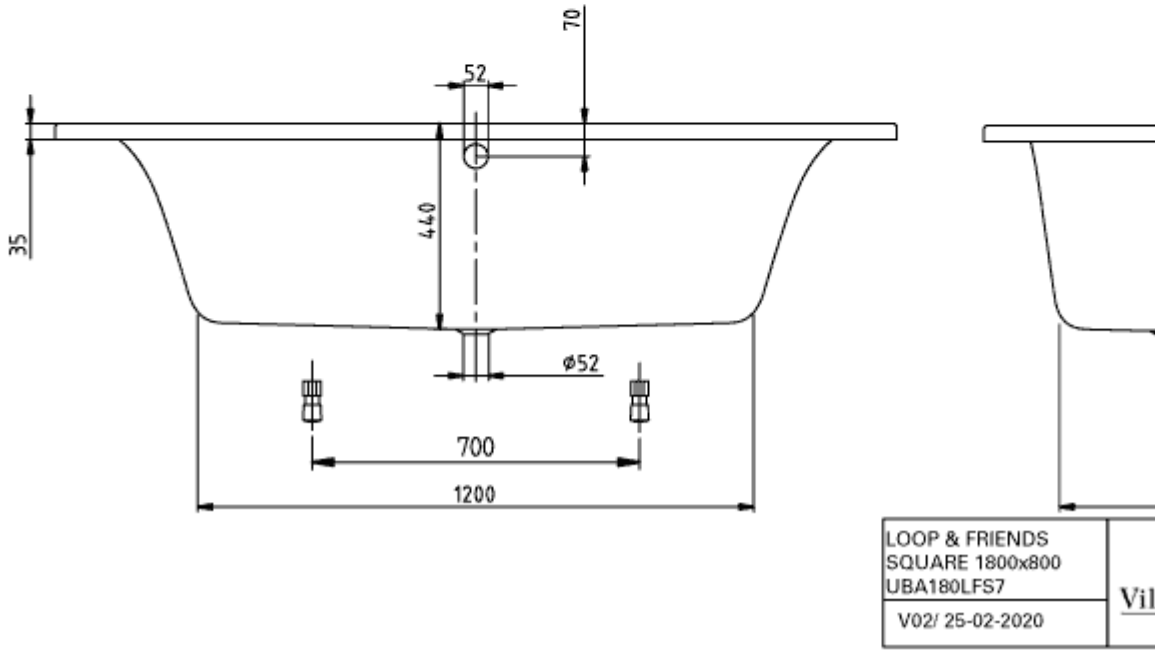
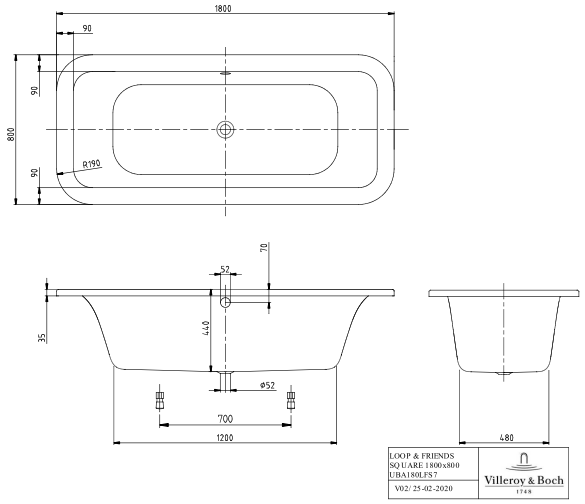
UBA180LFS7V-01