MORE TO SEE 14 MIRROR RECTANGLE

PRODUCT INFORMATION

Article title	Villeroy & Boch More To See 14 Mirror, with lighting, 1000 x 750 x 47 mm
Article number	A4291000
Assembly / Assembly type	wall-mounted
Scope of delivery	1 x mirror , 1 x fastening set
Depth in mm	47
Width in mm	1000
Height in mm	750
Collection	More To See 14
Function	with lighting
Material	Glass
Shape	Rectangle
With lighting	Yes
Smart home compatible	No

TECHNICAL DRAWINGS

A4291000

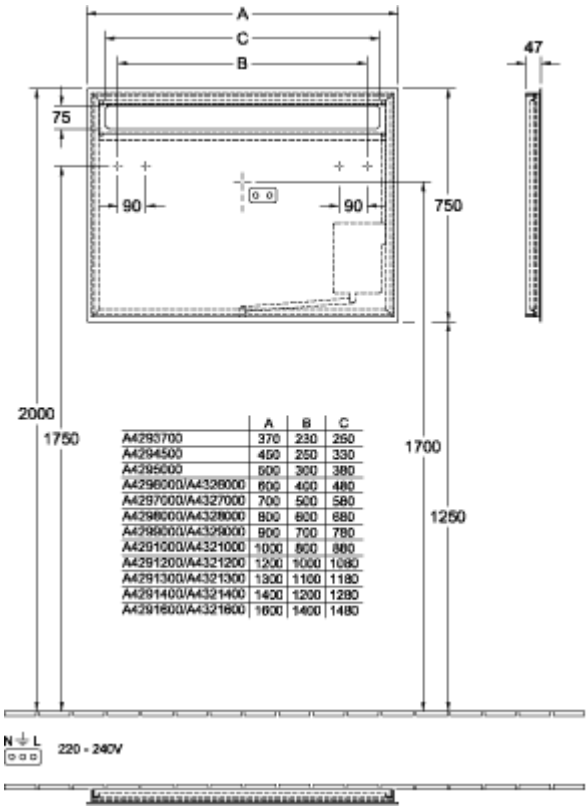

	A	B	C
A4293700	370	230	250
A4294500	450	250	330
A4295000	500	300	380
A4296000/A4328000	600	400	480
A4297000/A4327000	700	500	580
A4298000/A4328000	800	600	680
A4299000/A4329000	900	700	780
A4291000/A4321000	1000	800	880
A4291200/A4321200	1200	1000	1080
A4291300/A4321300	1300	1100	1180
A4291400/A4321400	1400	1200	1280
A4291600/A4321600	1600	1400	1480

A4291000

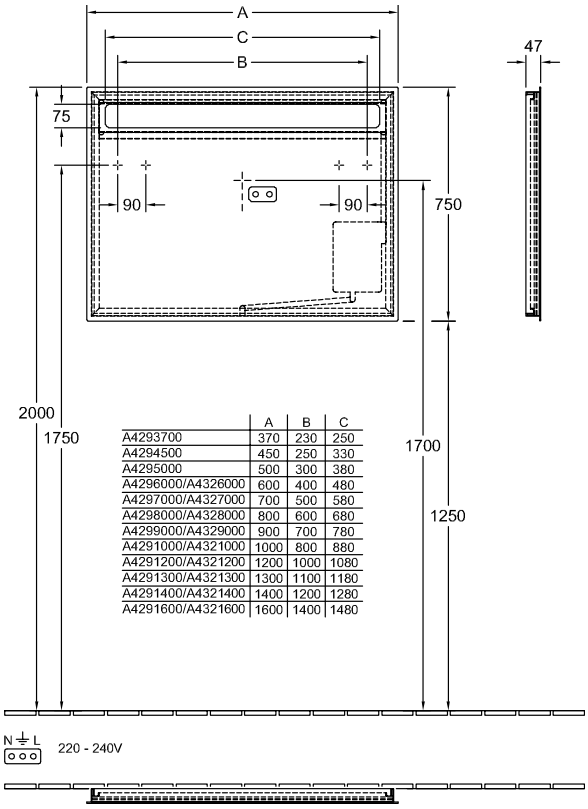

	A	B	C
A4293700	370	230	250
A4294500	450	250	330
A4295000	500	300	380
A4296000/A4326000	600	400	480
A4297000/A4327000	700	500	580
A4298000/A4328000	800	600	680
A4299000/A4329000	900	700	780
A4291000/A4321000	1000	800	880
A4291200/A4321200	1200	1000	1080
A4291300/A4321300	1300	1100	1180
A4291400/A4321400	1400	1200	1280
A4291600/A4321600	1600	1400	1480