MORE TO SEE MIRROR RECTANGLE

PRODUCT INFORMATION

Article title	Villeroy & Boch More To See Mirror, with lighting, 1000 x 750 x 126 mm
Article number	A4041000
Assembly / Assembly type	wall-mounted
Equipment	1 x lamp
Scope of delivery	1 x mirror , 1 x fastening set
Depth in mm	126
Width in mm	1000
Height in mm	750
Collection	More To See
Function	with lighting
Material	Glass
Shape	Rectangle
With lighting	Yes
Smart home compatible	No

TECHNICAL DRAWINGS

A4041000

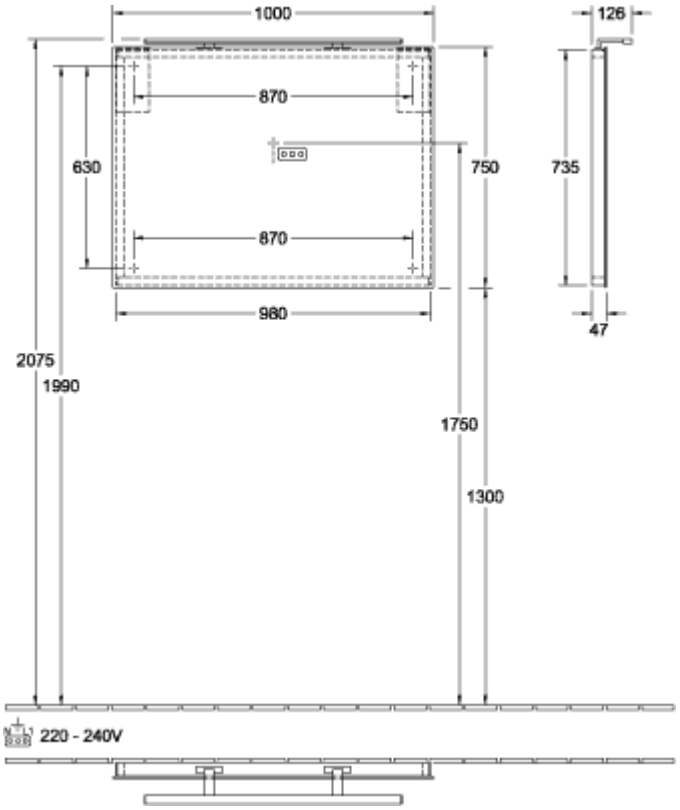

A4041000

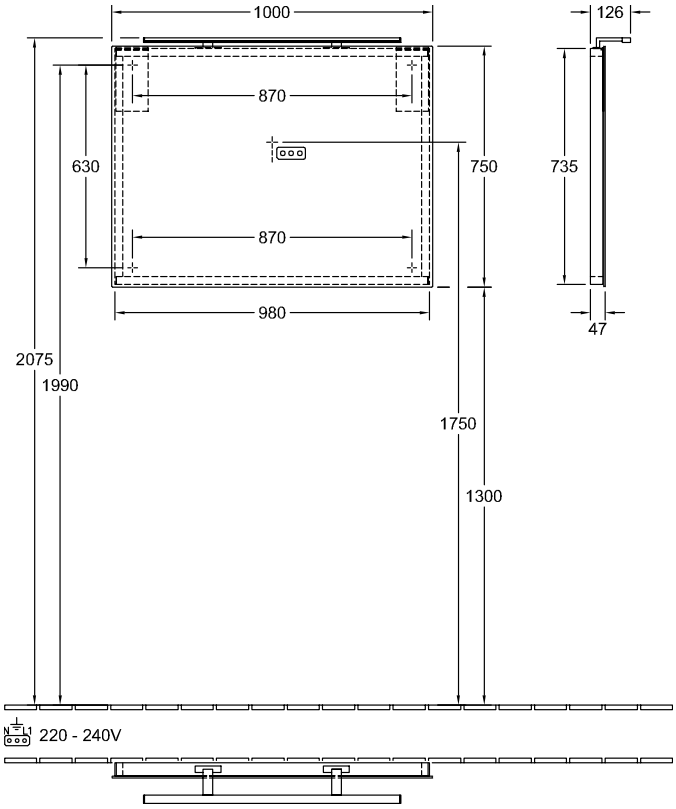
1000
126
870
630
750
735
870
980
47
2075
1990
1750
1300
220 - 240V