SUBWAY SIPHONIC URINAL OVAL

PRODUCT INFORMATION

Article title	Villeroy & Boch Subway Siphonic urinal, without cover, concealed water inlet, 285 x 315 mm, Stone White CeramicPlus
Article number	751300RW
Assembly / Assembly type	wall-mounted
Scope of delivery	1 x siphonic urinal , 1 x fastening set
Depth in mm	315
Width in mm	285
Height in mm	535
Collection	Subway
Suitable for	Installation without lid
Flush volume l	1,0 / l
Material	Sanitary ceramics
surface	matt
Colour name	Stone White CeramicPlus
Shape	Oval
Colour designation	Stone White
Easy surface cleaning (CeramicPlus)	Yes
Rimless (mit DirectFlush)	No
Flush type	Siphonic urinal
Outlet / outlet	Outlet may be concealed depending on the type of extractor section

TECHNICAL DRAWINGS

751300RW

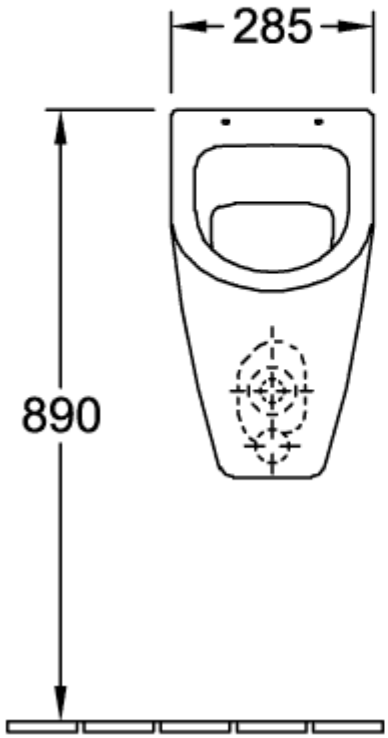
285
890

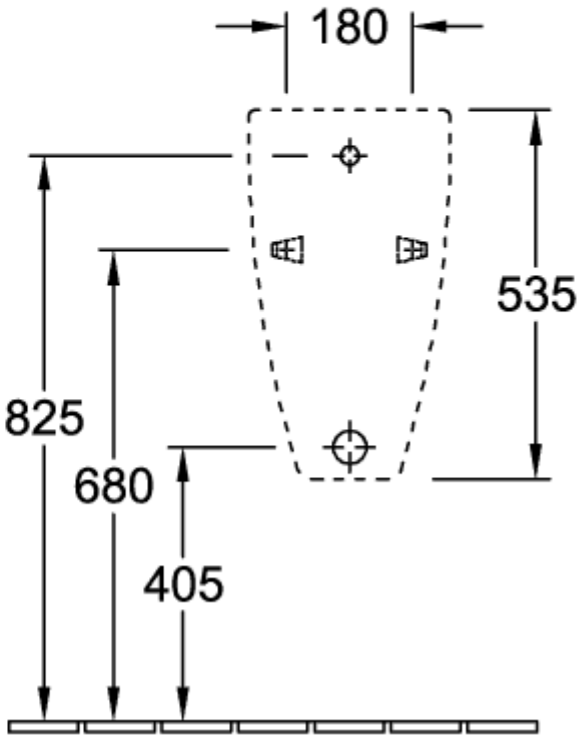
180
535
825
680
405

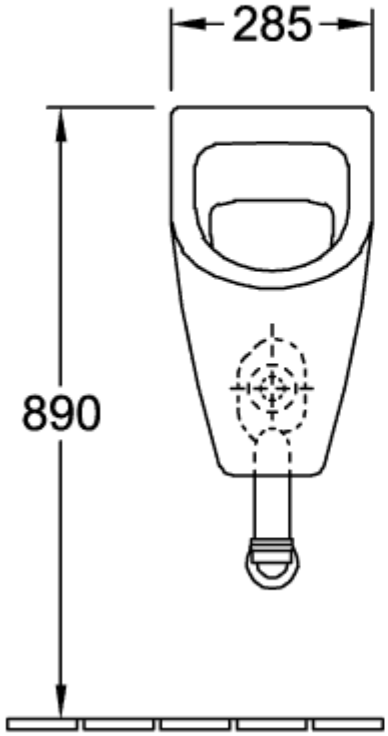
285
890

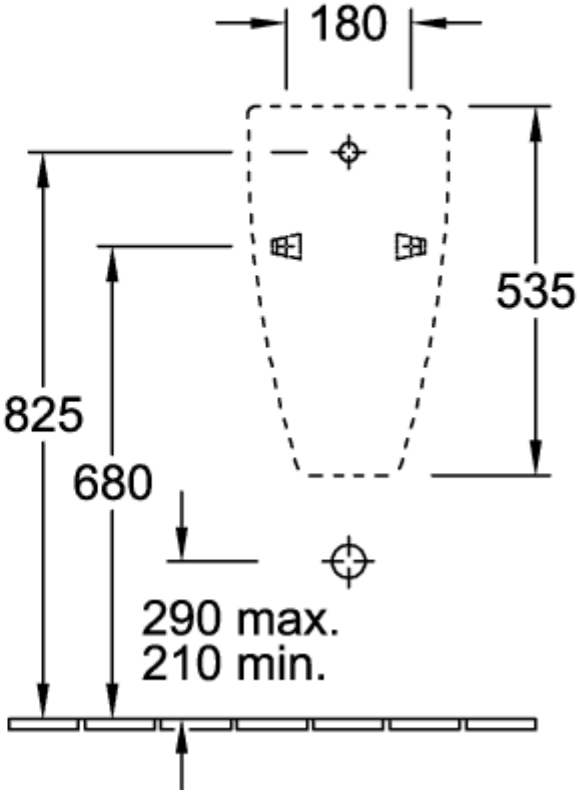
180
535
825
680
290 max.
210 min.

751300RW

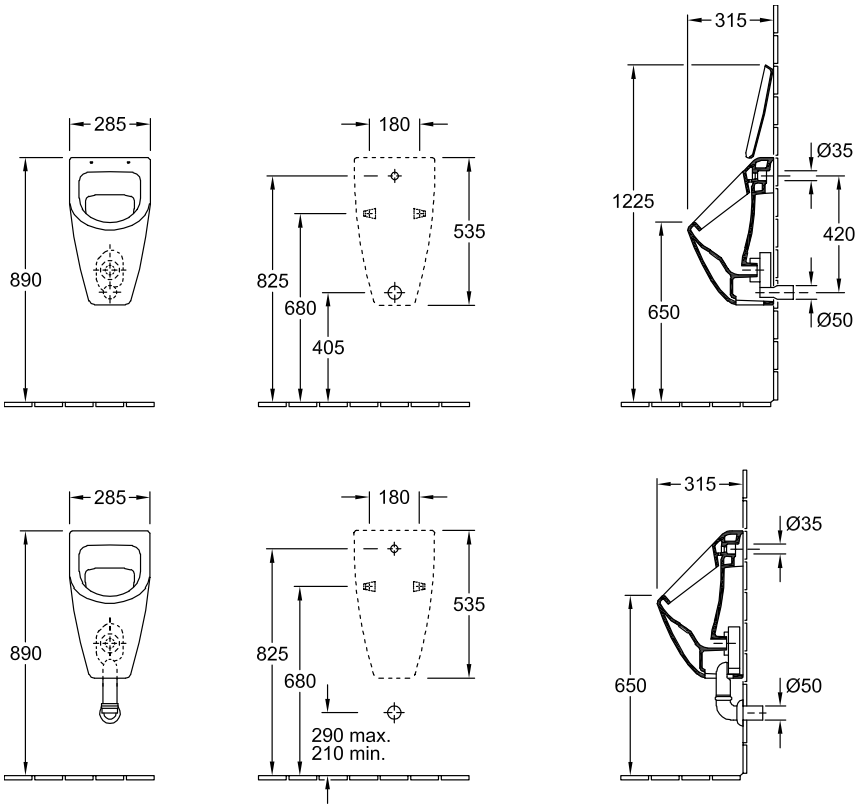
285
890
180
535
825
680
405
315
1225
650
Ø35
420
Ø50
285
890
180
535
825
680
290 max.
210 min.
315
650
Ø35
Ø50