AVENTO HANDWASHBASIN RECTANGLE

PRODUCT INFORMATION

Article title	Villeroy & Boch Avento Handwashbasin, 450 x 370 x 180 mm, White Alpin, with overflow
Article number	73584501
Assembly / Assembly type	wall-mounted
Scope of delivery	1 x handwashbasin
Depth in mm	370
Width in mm	450
Height in mm	180
Interior depth	95
Collection	Avento
Suitable for	1-hole mixer, Matching Villeroy&Boch furniture
Material	Sanitary ceramics
surface	glossy
Colour name	White Alpin
With overflow	Yes
Shape	Rectangle
Colour designation	White Alpin
Antibacterial surface (with AntiBac)	No
Easy surface cleaning (CeramicPlus)	No
Number of tap holes punched through	1
Number of bowls	1

TECHNICAL DRAWINGS

73584501

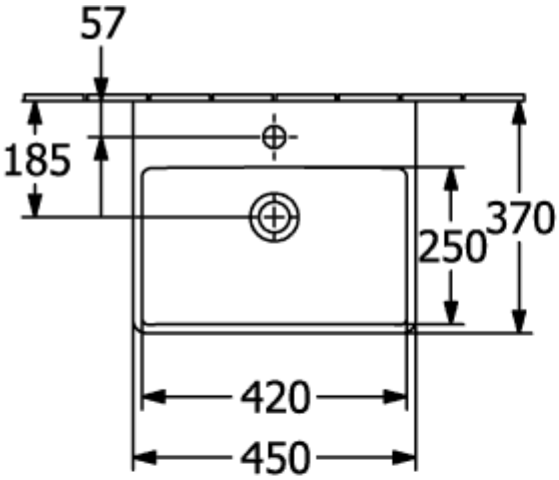

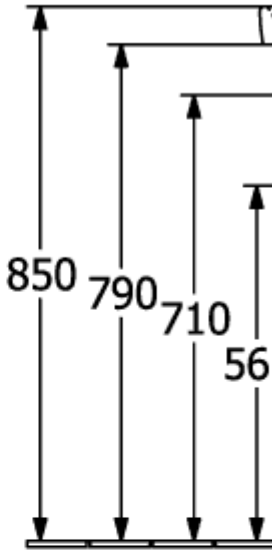

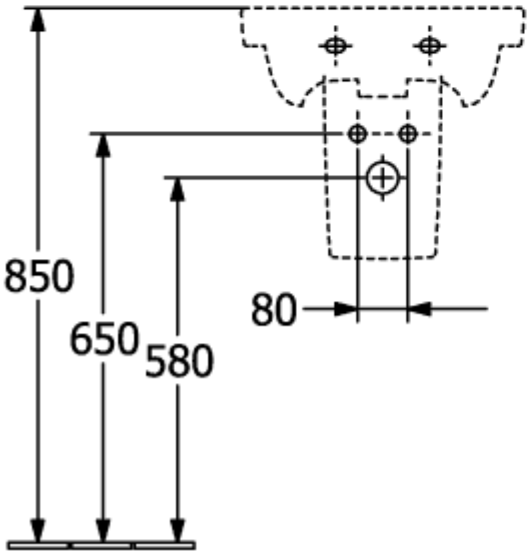

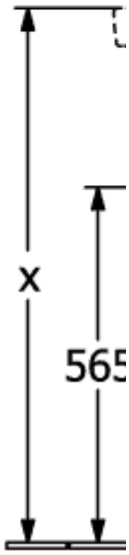

73584501

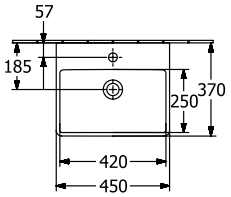
57
185
250
370
420
450

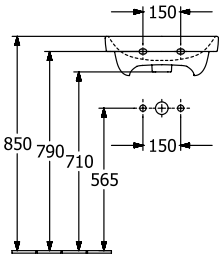
150
850
790
710
565
150

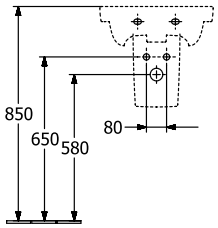
850
650
580
80

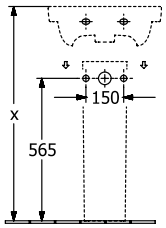
x
565
150

73584501

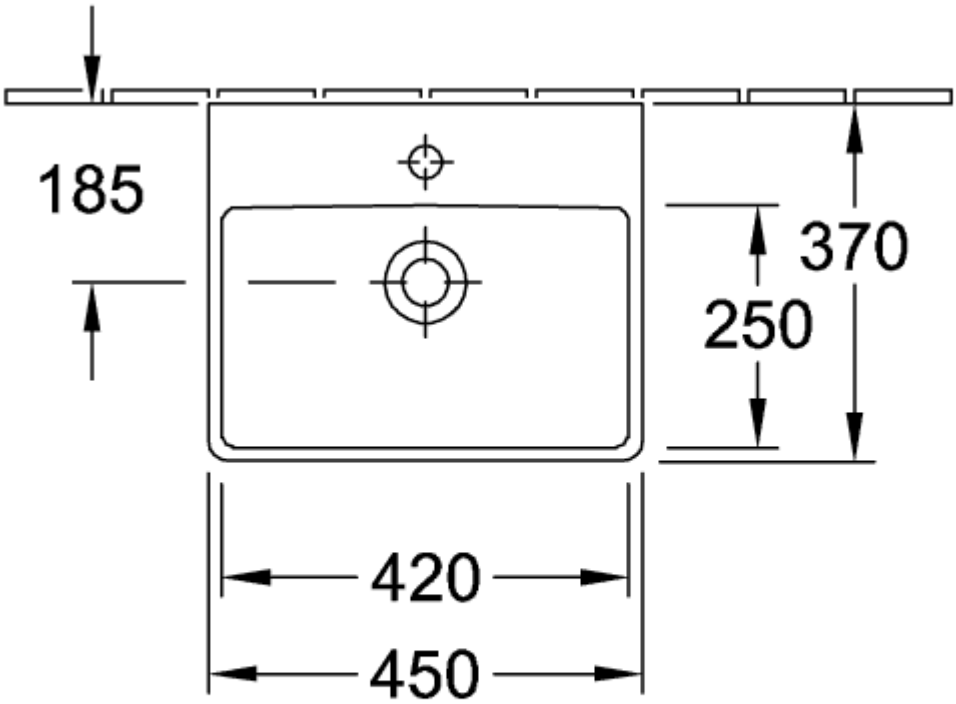
185
370
250
420
450

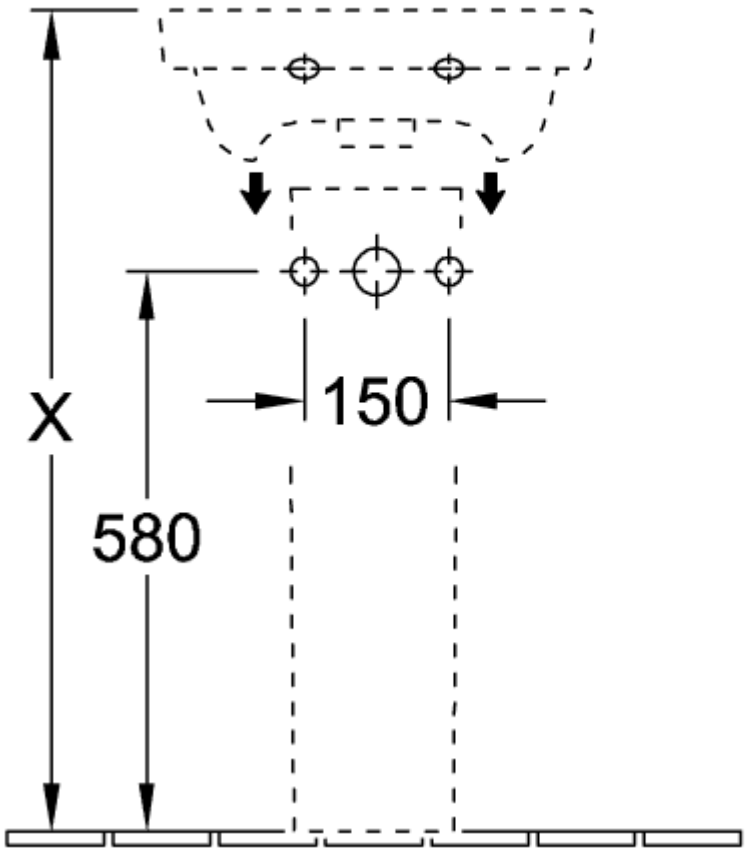
X
150
580

73584501

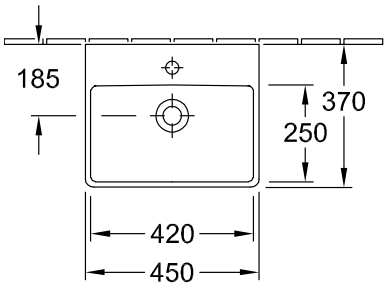
185
370
250
420
450

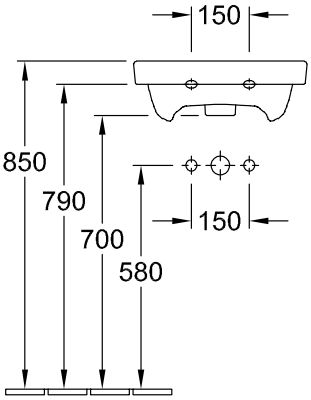
150
850
790
700
580
150

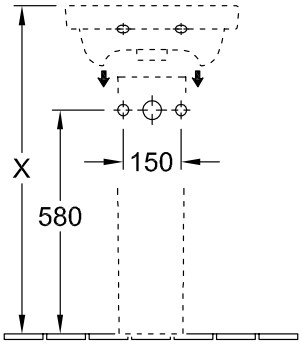
X
580
150

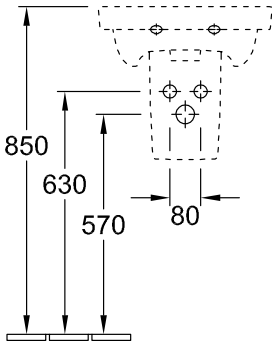
850
630
570
80