HOMMAGE WASHDOWN TOILET FOR CLOSE-COUPLED WC-SUITE OVAL

PRODUCT INFORMATION

Article title	Villeroy & Boch Hommage Washdown toilet for close-coupled WC-suite, floor-standing, Star White
Article number	66621096
Assembly / Assembly type	floor-standing
Assembly instructions	recommendation: to be installed from the wall at: 10 mm
Scope of delivery	1 x washdown toilet , 1 x fastening set
Collection	Hommage
Suitable for	Mounted cistern
Innovative flushing technology (with TwistFlush)	No
Flush volume l	3 / 6 l
Wall-mounted - floor-standing	floor-standing
Colour name	Star White
Shape	Oval
Colour designation	Star White
Antibacterial surface (with AntiBac)	No
Easy surface cleaning (CeramicPlus)	No
Rimless (mit DirectFlush)	No
Flush type	Washdown toilet
Integrated freshness solution (with ViFresh)	No
Outlet / outlet	horizontal outlet

TECHNICAL DRAWINGS

66621096

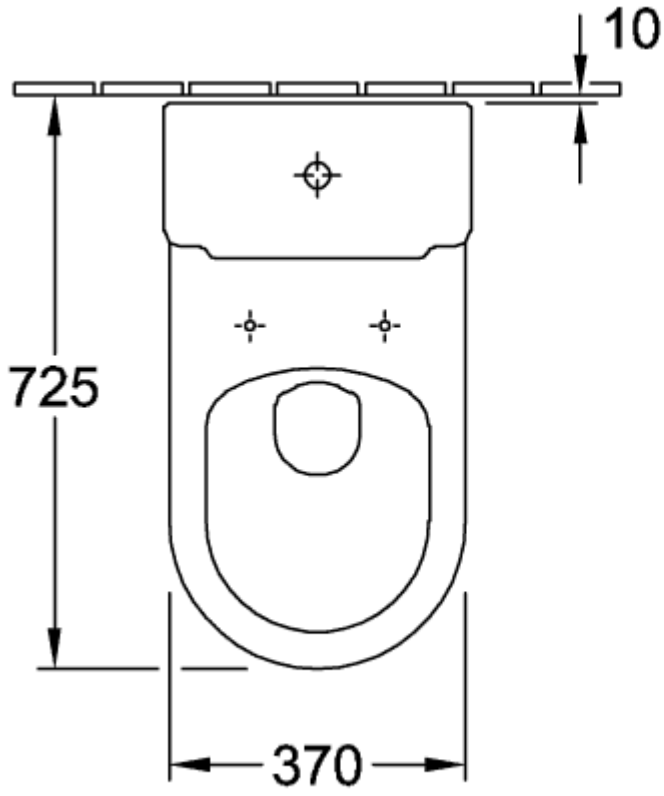
10
725
370

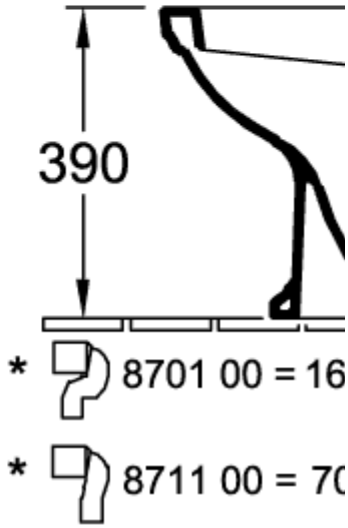
390
* 8701 00 = 16
* 8711 00 = 70

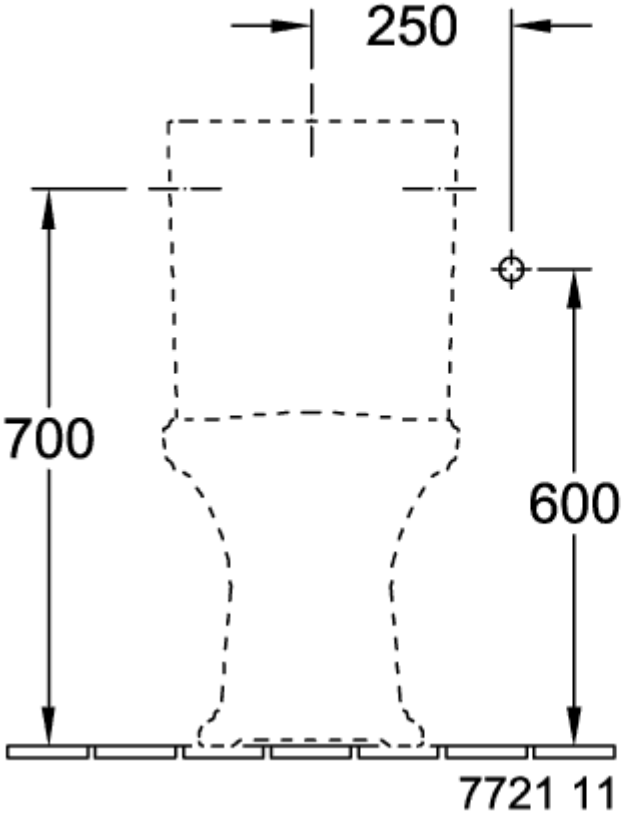
250
700
600
7721 11

100
700

66621096

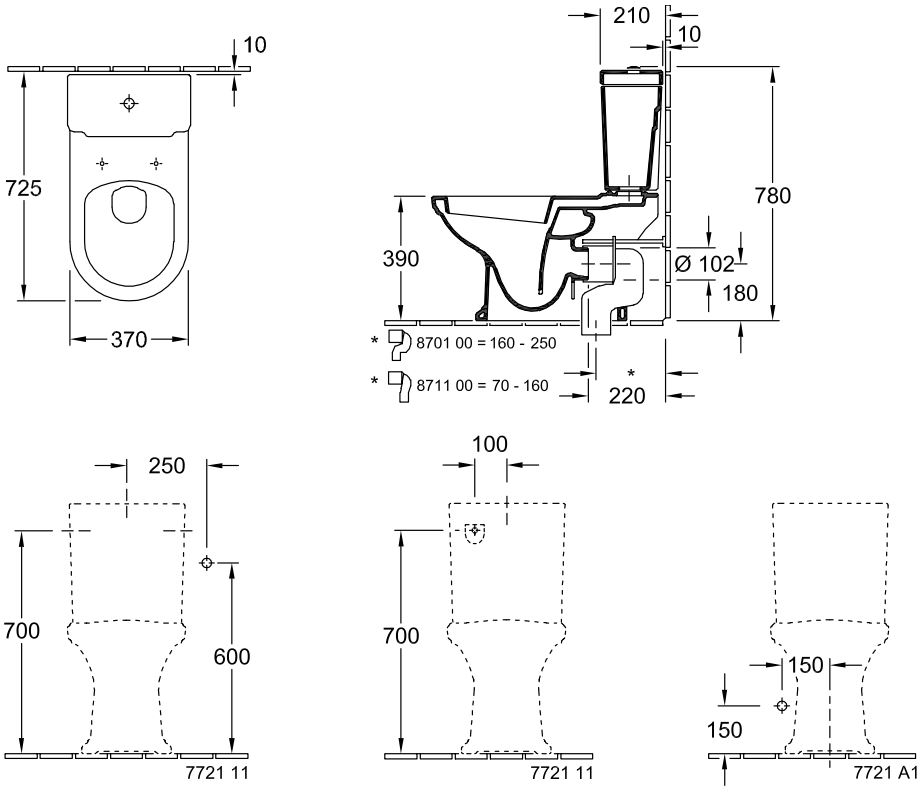

66621096

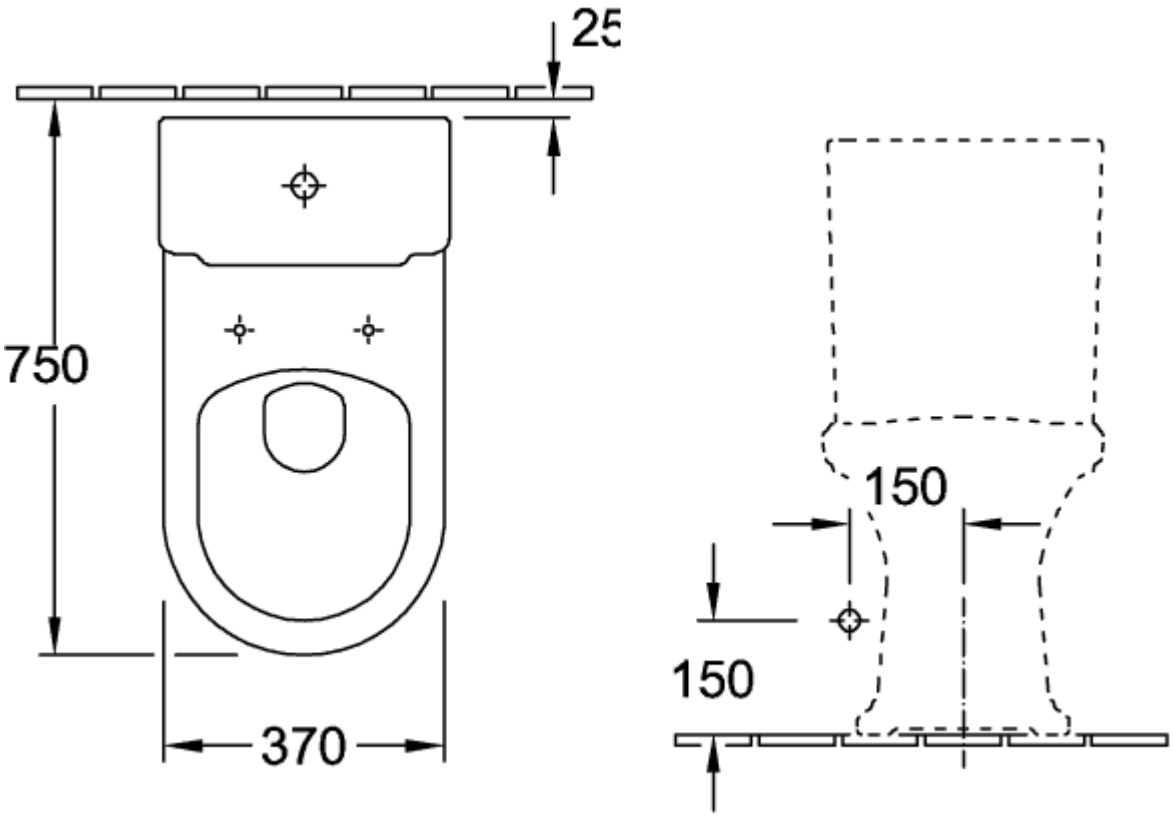

66621096

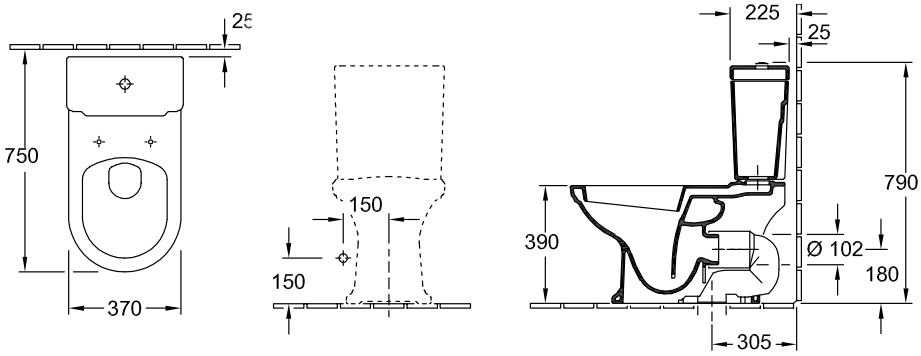

66621096

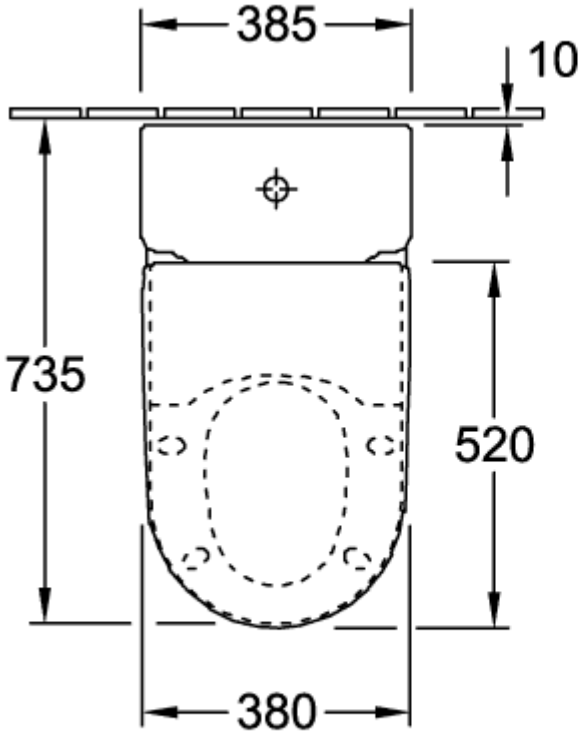
385
10
735
520
380

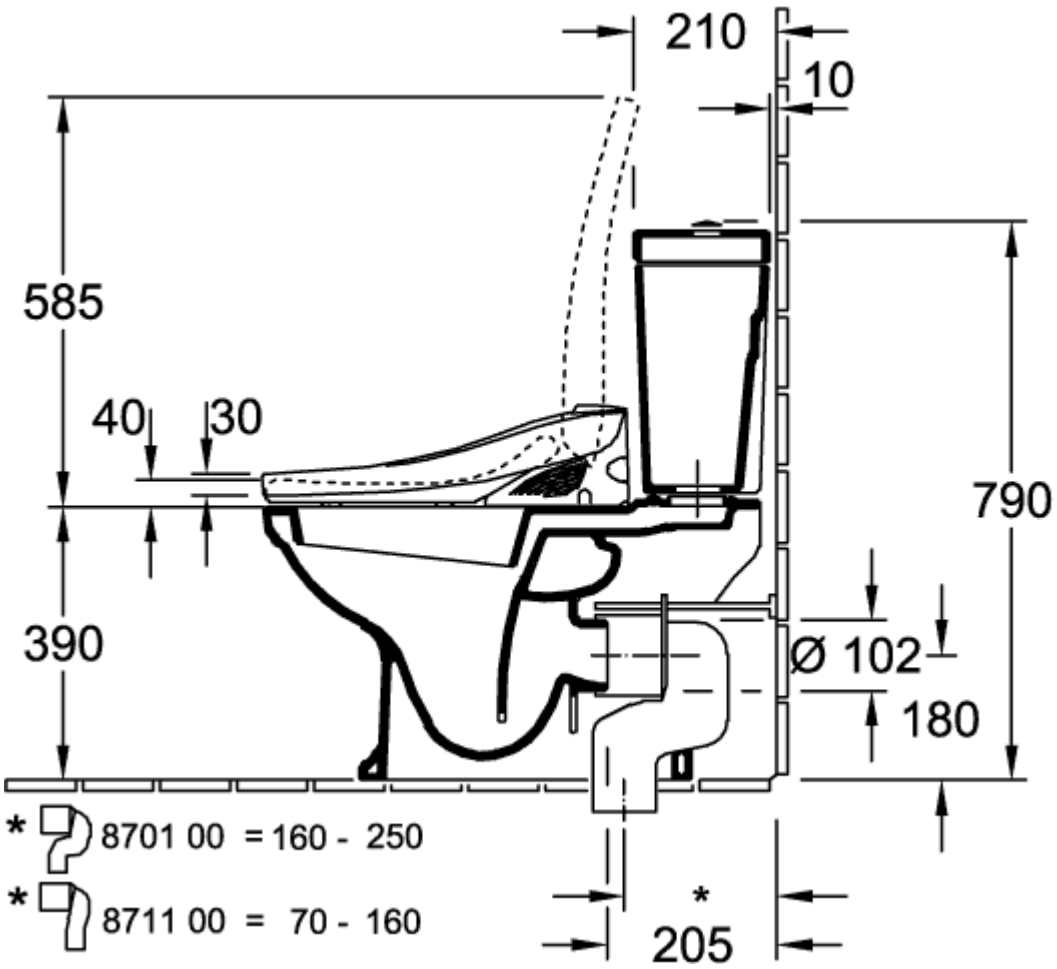
210
10
585
40
30
790
390
Ø 102
180
* 8701 00 = 160 - 250
* 8711 00 = 70 - 160
*
205

66621096

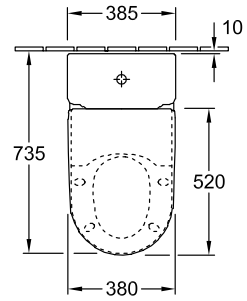
385
10
735
520
380

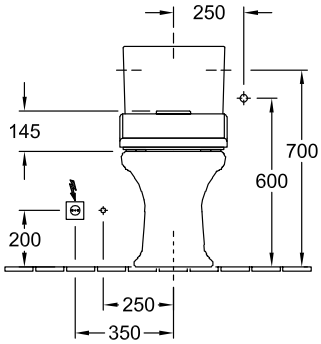
250
145
700
600
200
250
350

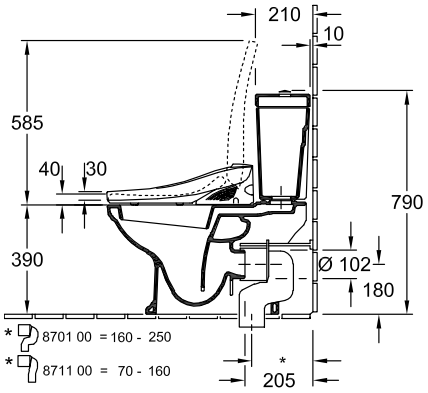
210
10
585
40
30
790
390
Ø 102
180
* 8701 00 = 160 - 250
* 8711 00 = 70 - 160
*
205

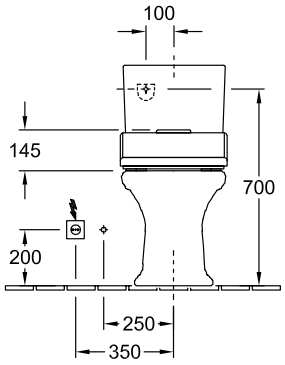
100
145
700
200
250
350

66621096

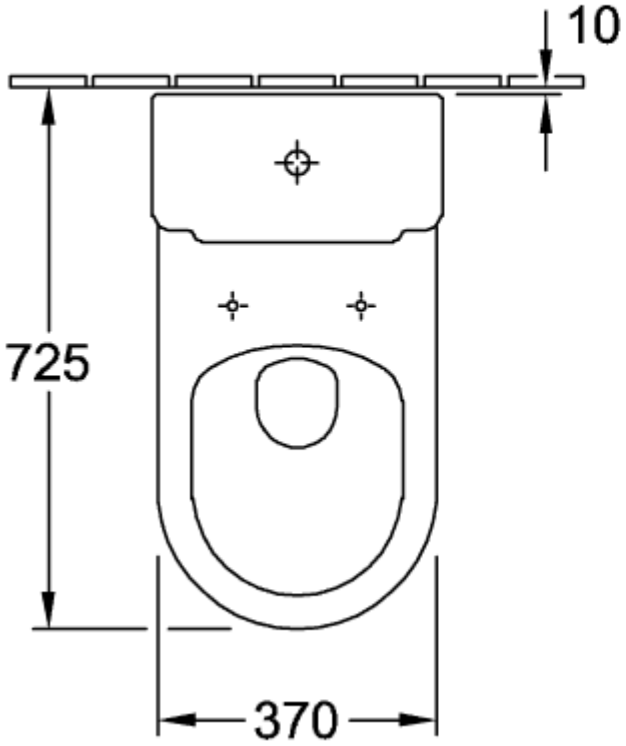
10
725
370

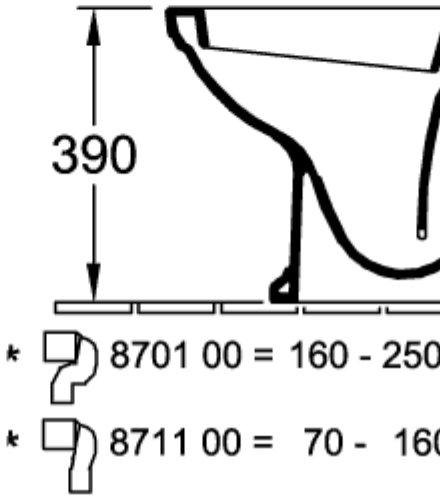
390
* 8701 00 = 160 - 250
* 8711 00 = 70 - 160

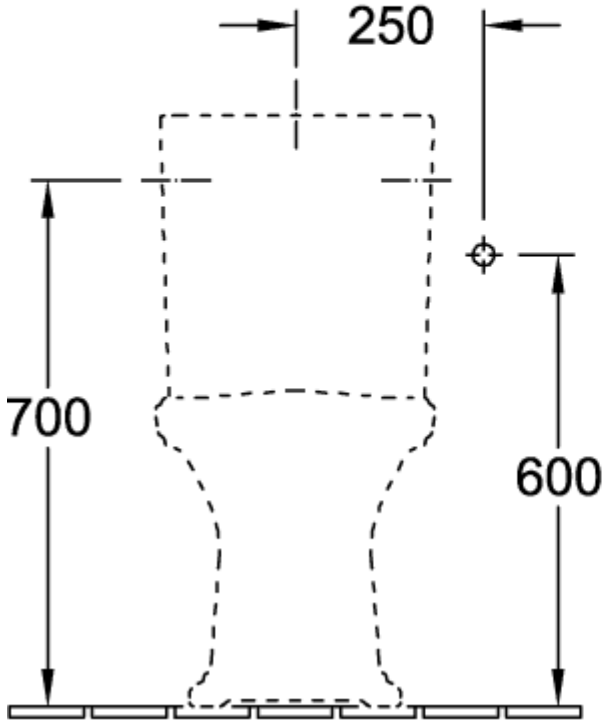
250
700
600

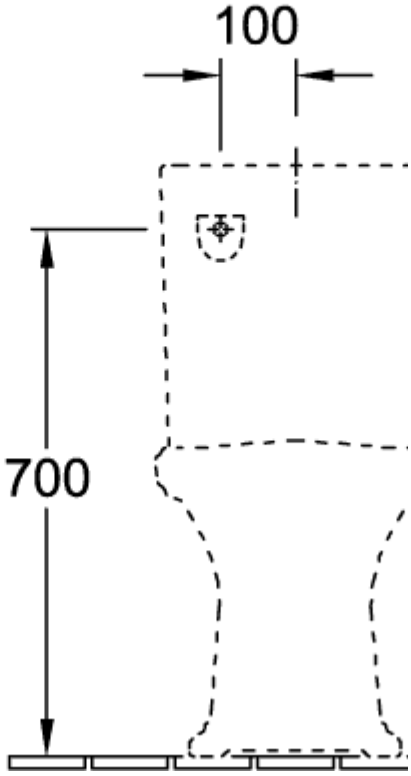
100
700

66621096

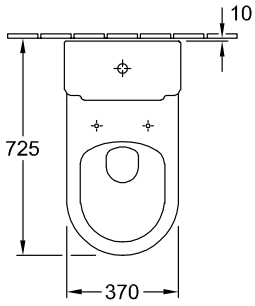
10
725
370

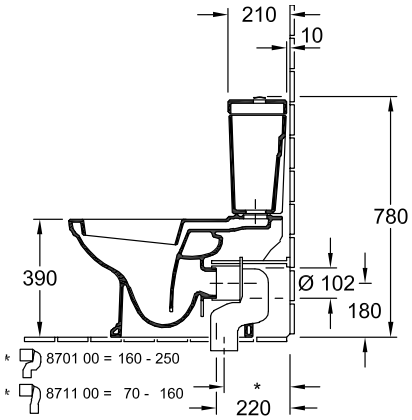
210
10
780
390
Ø 102
180
* 8701 00 = 160 - 250
* 8711 00 = 70 - 160
*
220

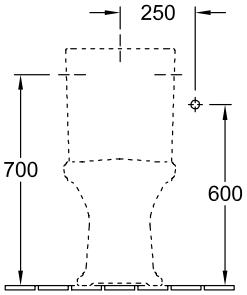
250
700
600

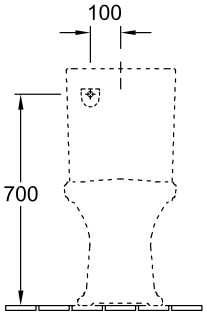
100
700