# SUBWAY INFINITY RECTANGULAR SHOWER TRAY RECTANGLE

## PRODUCT INFORMATION

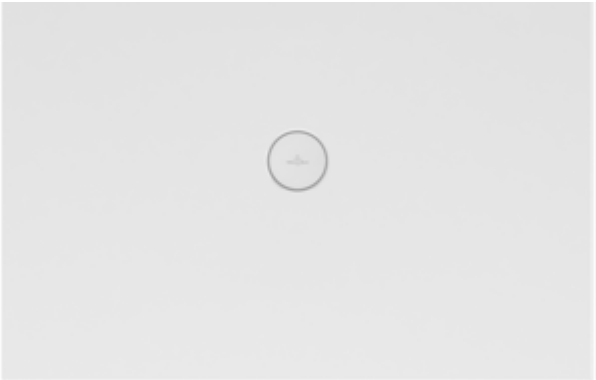

| | |
|---|---|
| Article title | Villeroy & Boch Subway Infinity Rectangular shower tray, 1400 x 800 x 40 mm, White Alpin |
| Article number | 6231T301 |
| Assembly / Assembly type | flush-fitting installation, Installation on tiles\|Installation on a base |
| Assembly instructions | The installation height of the shower tray can be reduced by 30 mm if the outlet fitting 9226 00 XX is used. Attention! This outlet fitting does not conform to EN274., These shower trays are cut on the long side and must be positioned with the cut side (not glazed) against the wall. |
| Scope of delivery | 1 x rectangular shower tray |
| Length in mm | 1400 |
| Width in mm | 800 |
| Height in mm | 40 |
| Interior depth | 12 |
| Collection | Subway Infinity |
| Material | Sanitary ceramics |
| surface | matt |
| Colour name | White Alpin |
| Shape | Rectangle |
| Colour designation | White Alpin |
| Antibacterial surface (with AntiBac) | No |
| Easy surface cleaning (CeramicPlus) | No |
| With slip resistance | Yes |

# TECHNICAL DRAWINGS

**6231T301**

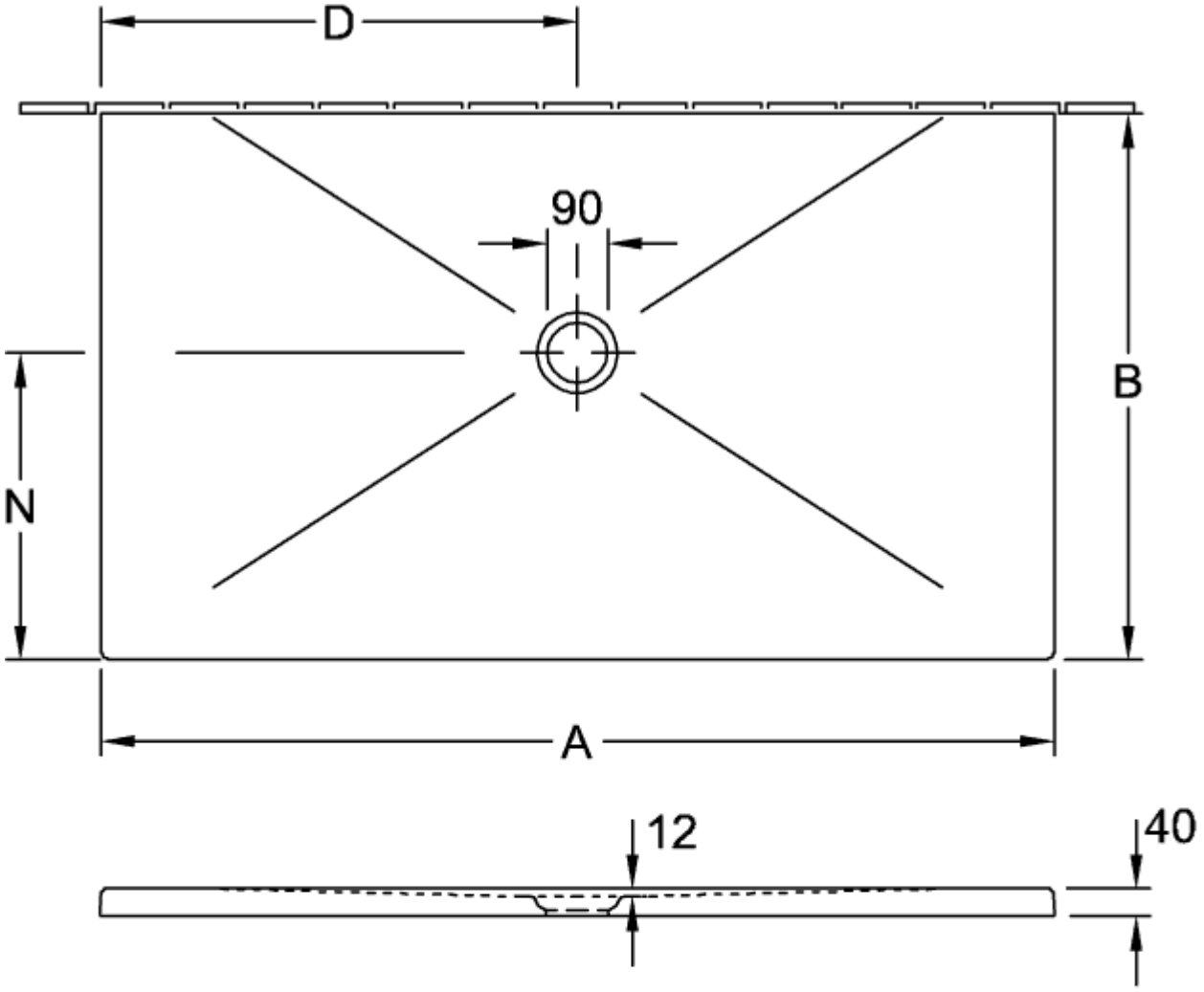


| | A | B | D | N |
|---|---|---|---|---|
| 6232 54 | 1600 | 900 | 800 | 500 |
| 6231 T3 | 1400 | 800 | 700 | 450 |
| 6231 T2 | 1400 | 750 | 700 | 450 |
| 6230 P3 | 1200 | 800 | 600 | 450 |
| 6230 P2 | 1200 | 750 | 600 | 450 |
| 6229 K2 | 1000 | 750 | 500 | 400 |
| 6229 K1 | 1000 | 700 | 500 | 400 |

## 6231T301

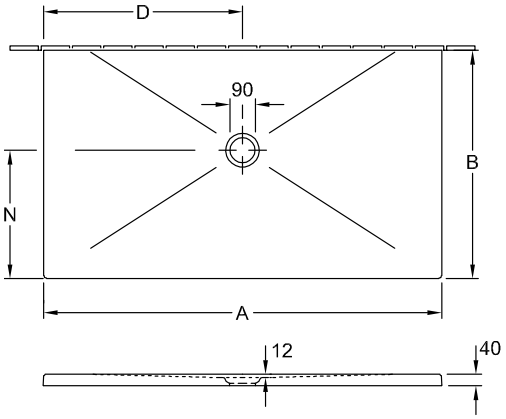


| | A | B | D | N |
|---|---|---|---|---|
| 6232 54 | 1600 | 900 | 800 | 500 |
| 6231 T3 | 1400 | 800 | 700 | 450 |
| 6231 T2 | 1400 | 750 | 700 | 450 |
| 6230 P3 | 1200 | 800 | 600 | 450 |
| 6230 P2 | 1200 | 750 | 600 | 450 |
| 6229 K2 | 1000 | 750 | 500 | 400 |
| 6229 K1 | 1000 | 700 | 500 | 400 |