LOOP & FRIENDS BUILT-IN WASHBASIN ROUND

PRODUCT INFORMATION

Article title	Villeroy & Boch Loop & Friends Built-in washbasin, 390 x 390 x 185 mm, White Alpin, with overflow, unground
Article number	61403901
Assembly / Assembly type	built-in installation
Scope of delivery	1 x built-in washbasin , 1 x cut-out template
Depth in mm	390
Width in mm	390
Height in mm	185
Interior depth	140
Diameter in mm	390
Collection	Loop & Friends
Material	Sanitary ceramics
surface	glossy
Colour name	White Alpin
With overflow	Yes
Shape	Round
Colour designation	White Alpin
Antibacterial surface (with AntiBac)	No
Easy surface cleaning (CeramicPlus)	No
Underside of washbasin	unground
Number of bowls	1

TECHNICAL DRAWINGS

61403901

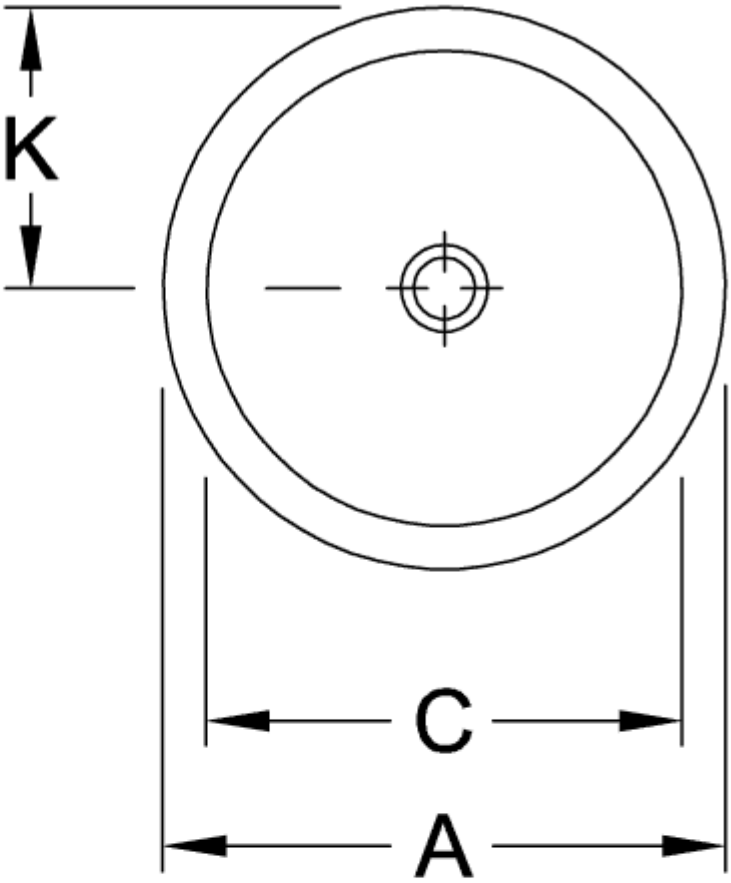

	A	C	G	K	R
6140 51	535	440	630	267	510
6141 51	535	440	630	267	510
6140 45	450	380	660	225	540
6141 45	450	380	660	225	540
6140 39	390	330	680	195	560
6141 39	390	330	680	195	560
6140 34	345	280	695	170	575
6141 34	345	280	695	170	575

61403901

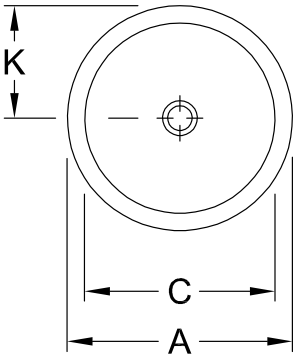

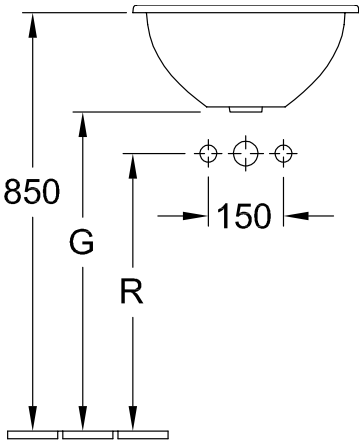

	A	C	G	K	R
6140 51	535	440	630	267	510
6141 51	535	440	630	267	510
6140 45	450	380	660	225	540
6141 45	450	380	660	225	540
6140 39	390	330	680	195	560
6141 39	390	330	680	195	560
6140 34	345	280	695	170	575
6141 34	345	280	695	170	575

61403901

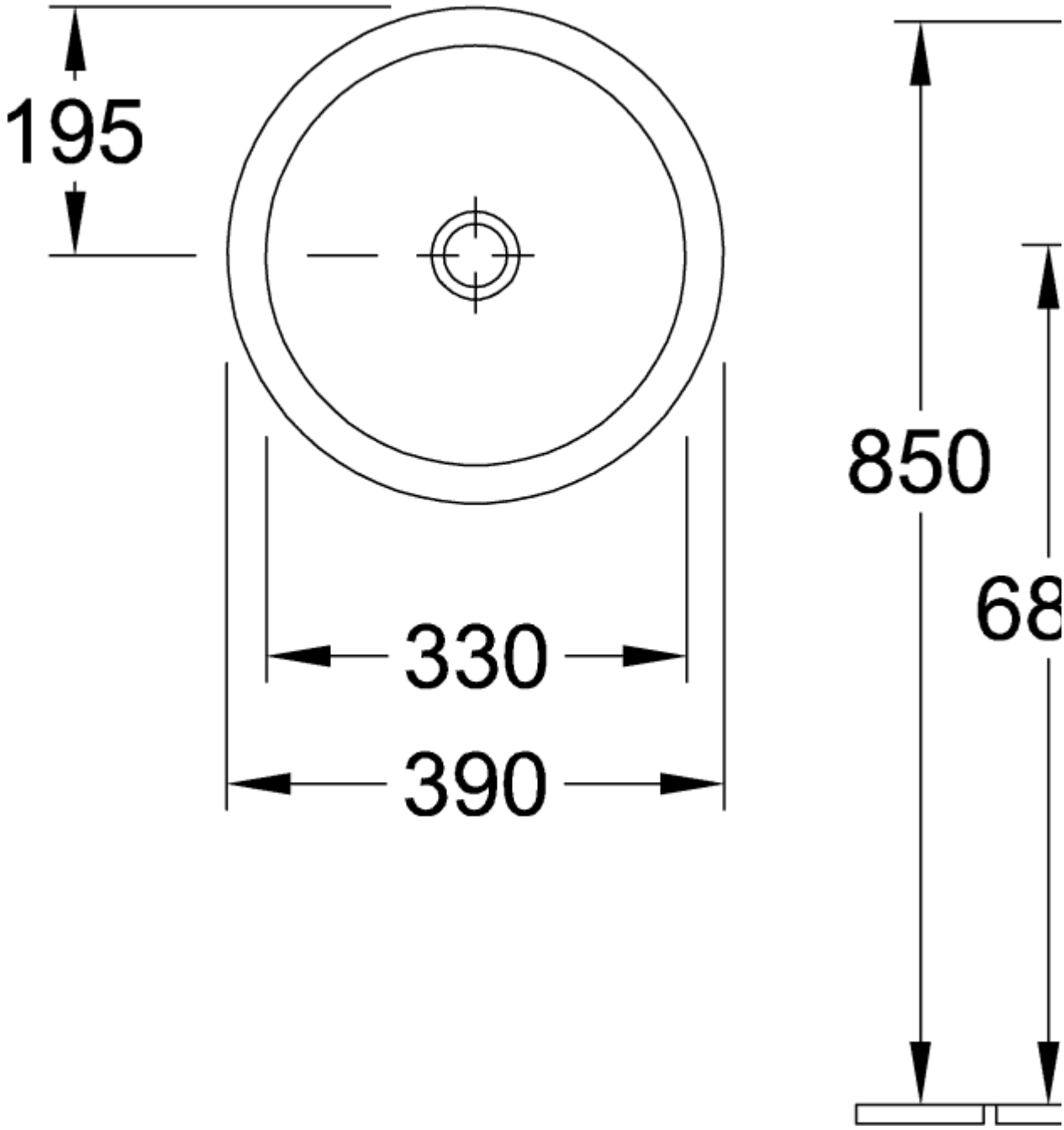
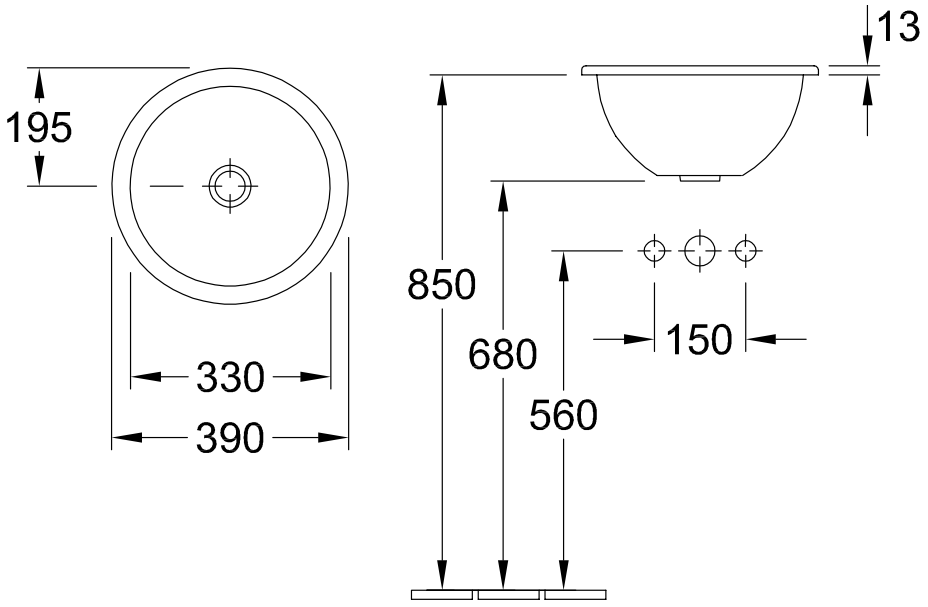
61403901