# O.NOVO COMBI-PACK OVAL

## PRODUCT INFORMATION

| | |
|---|---|
| Article title | Villeroy & Boch O.novo Combi-Pack, wall-mounted, White Alpin |
| Article number | 5688HR01 |
| Assembly / Assembly type | wall-mounted |
| Assembly instructions | not suitable for installation with flush valves |
| Scope of delivery | 1 x washdown toilet , 1 x toilet seat and cover |
| Depth in mm | 490 |
| Width in mm | 360 |
| Height in mm | 350 |
| Collection | O.novo |
| Suitable for | Concealed cistern |
| Innovative flushing technology (with TwistFlush) | No |
| Flush volume l | 3 / 4,5 l |
| Wall-mounted - floor-standing | wall-mounted |
| Function | • with automatic lowering mechanism (SoftClosing)<br>• with removable seat (QuickRelease) |
| Material | Sanitary ceramics |
| Colour name | White Alpin |
| Other material | Toilet seat and cover: Duroplast |
| Other surfaces | Toilet seat and cover: glossy |
| Shape | Oval |
| Colour designation | White Alpin |
| Other colour designations | Toilet seat and cover: White Alpin |
| Antibacterial surface (with AntiBac) | No |
| Easy surface cleaning (CeramicPlus) | No |
| Rimless (mit DirectFlush) | Yes |
| Flush type | Washdown toilet |
| Integrated freshness solution (with ViFresh) | No |
| Outlet / outlet | horizontal outlet |

## TECHNICAL DRAWINGS

**5688HR01**

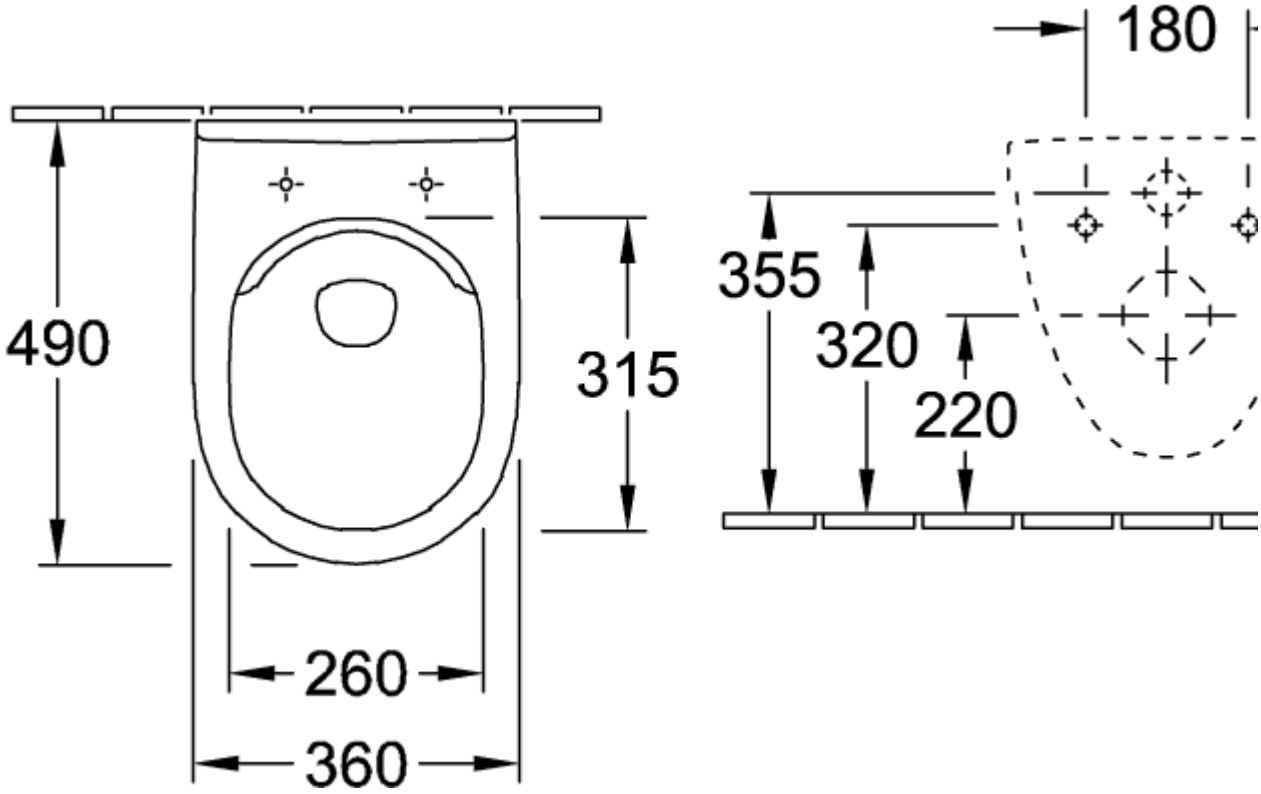

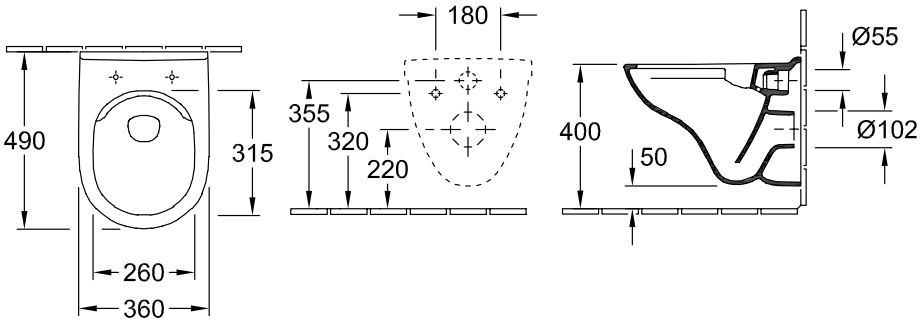
**5688HR01**