LEGATO WASHDOWN TOILET FOR CLOSE-COUPLED WC-SUITE, RIMLESS RECTANGLE

PRODUCT INFORMATION

Article title	Villeroy & Boch Legato Washdown toilet for close-coupled WC-suite, rimless, floor-standing, White Alpin
Article number	5634R001
Assembly / Assembly type	floor-standing
Assembly instructions	recommendation: to be installed from the wall at: 15 mm, not suitable for installation with flush valves
Scope of delivery	1 x washdown toilet, rimless , 1 x fastening set
Depth in mm	700
Width in mm	375
Height in mm	400
Collection	Legato
Suitable for	Mounted cistern
Innovative flushing technology (with TwistFlush)	No
Innovative flushing technology (with TwistFlush[e³])	No
Flush volume l	3 / 4,5 l
Wall-mounted - floor-standing	floor-standing
Material	Sanitary ceramics
surface	glossy
Colour name	White Alpin
Shape	Rectangle
Colour designation	White Alpin
Antibacterial surface (with AntiBac)	No
Easy surface cleaning (CeramicPlus)	No
Rimless (mit DirectFlush)	Yes
Flush type	Washdown toilet
Integrated freshness solution (with ViFresh)	No
Outlet / outlet	horizontal outlet

TECHNICAL DRAWINGS

5634R001

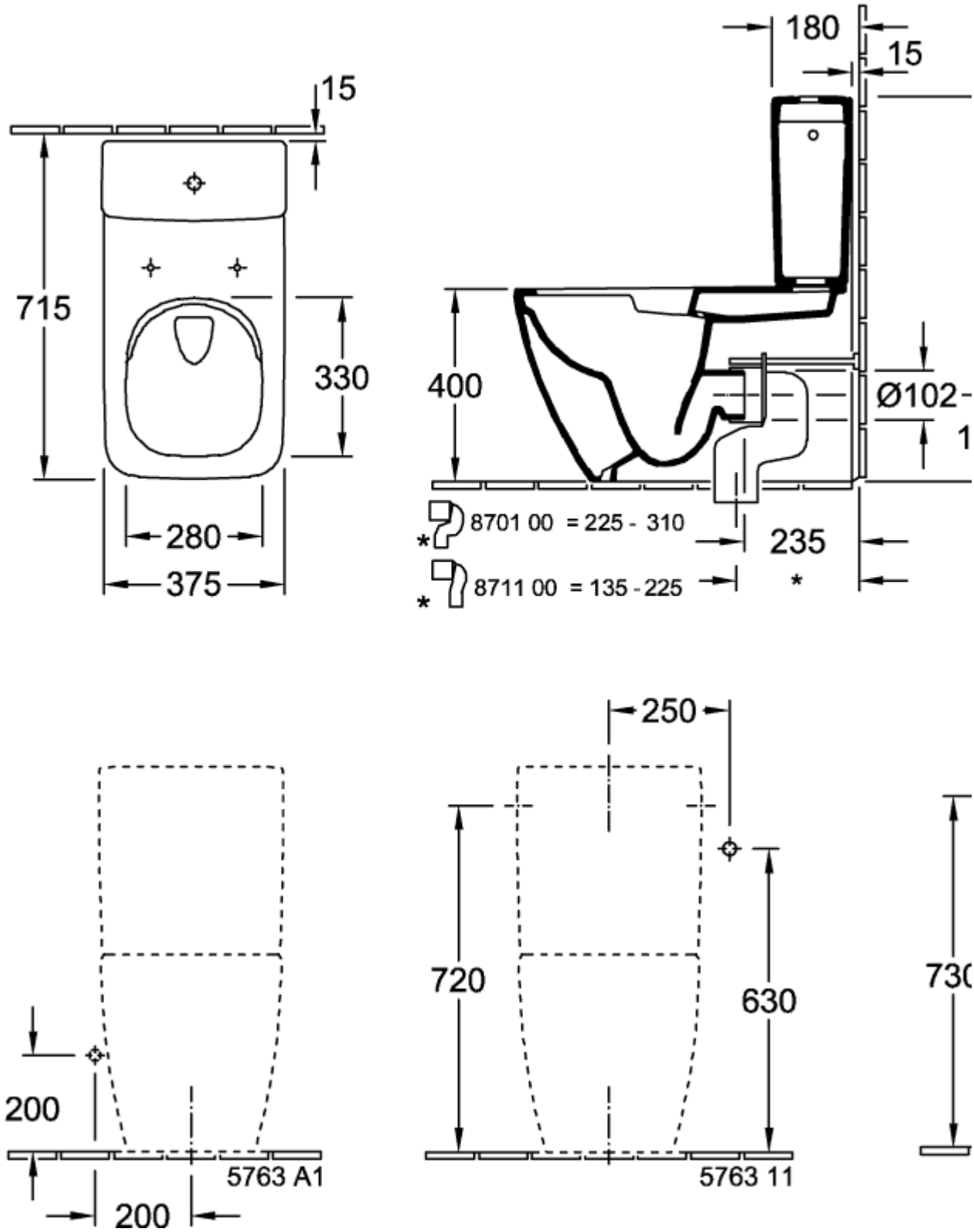
15
715
330
280
375
180
15
400
Ø102
1
8701 00 = 225 - 310
235
8711 00 = 135 - 225
250
720
630
730
200
200
5763 A1
5763 11

5634R001

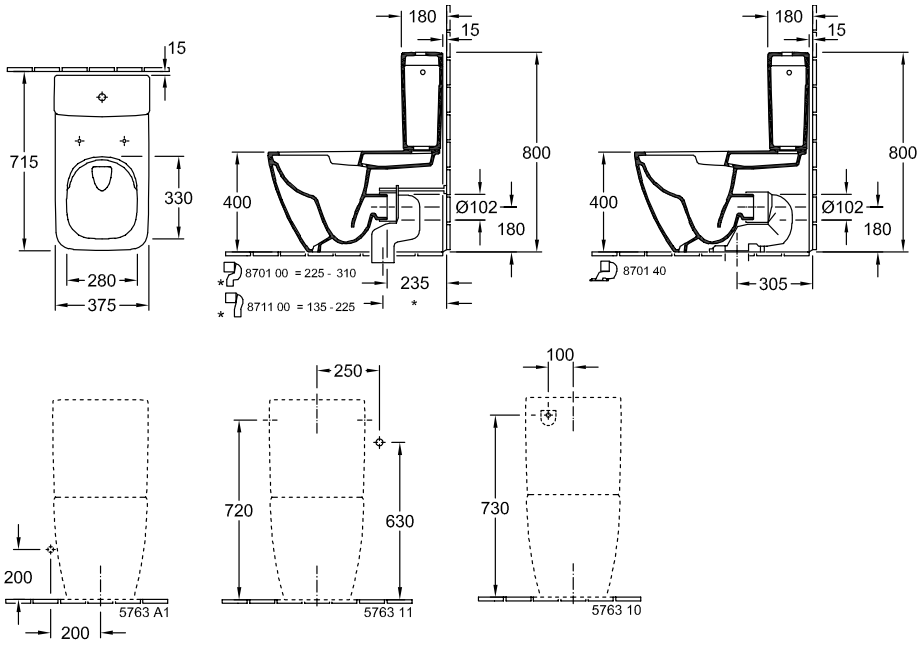
15
715
330
280
375
180
15
800
400
Ø102
180
8701 00 = 225 - 310
235
8711 00 = 135 - 225
180
15
800
400
Ø102
180
8701 40
305
250
720
630
5763 11
100
730
5763 10
200
5763 A1
200