SUBWAY 2.0 WASHDOWN TOILET FOR CLOSE-COUPLED WC-SUITE, RIMLESS OVAL

PRODUCT INFORMATION

Article title	Villeroy & Boch Subway 2.0 Washdown toilet for close-coupled WC-suite, rimless, floor-standing, White Alpin
Article number	5617R001
Assembly / Assembly type	floor-standing
Assembly instructions	recommendation: to be installed from the wall at: 15 mm
Scope of delivery	1 x washdown toilet, rimless , 1 x fastening set
Depth in mm	700
Width in mm	370
Height in mm	400
Collection	Subway 2.0
Suitable for	Mounted cistern
Innovative flushing technology (with TwistFlush)	No
Flush volume l	3 / 4,5 l
Wall-mounted - floor-standing	floor-standing
Material	Sanitary ceramics
surface	glossy
Colour name	White Alpin
Shape	Oval
Colour designation	White Alpin
Antibacterial surface (with AntiBac)	No
Easy surface cleaning (CeramicPlus)	No
Rimless (mit DirectFlush)	Yes
Flush type	Washdown toilet
Integrated freshness solution (with ViFresh)	No
Outlet / outlet	horizontal outlet

TECHNICAL DRAWINGS

5617R001

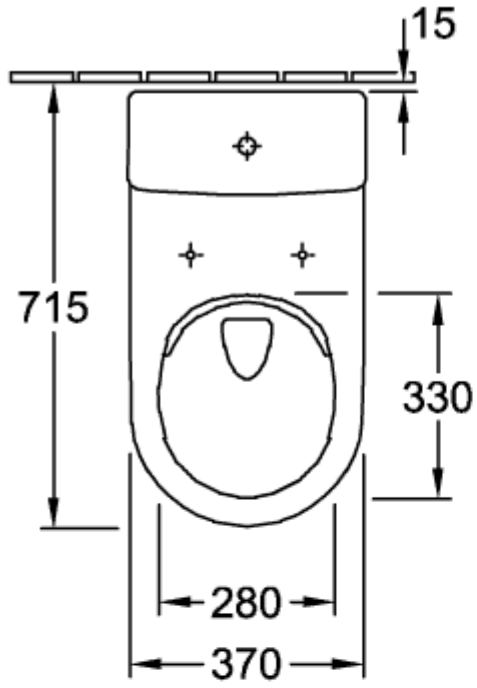
15
715
330
280
370

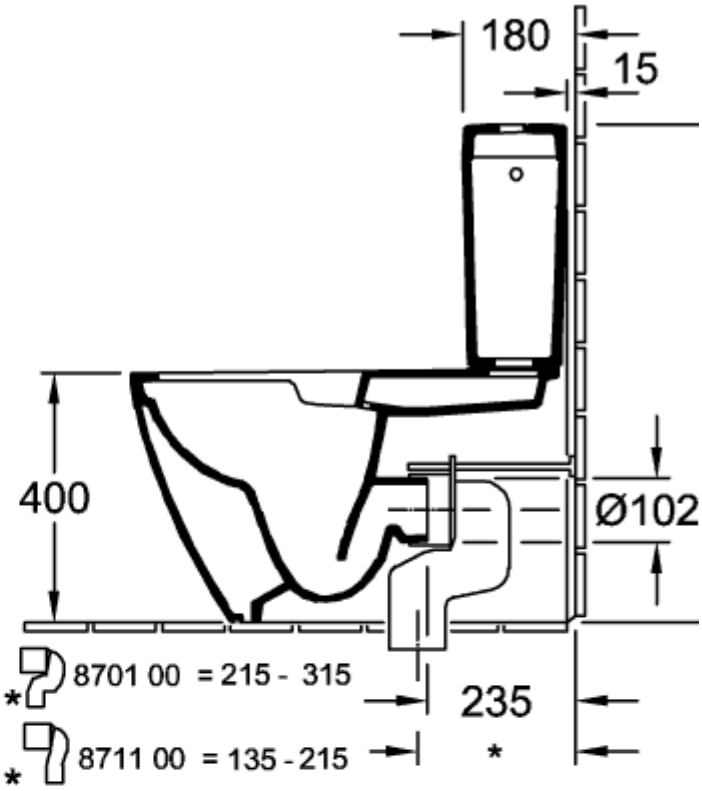
180
15
400
Ø102
8701 00 = 215 - 315
8711 00 = 135 - 215
235
*

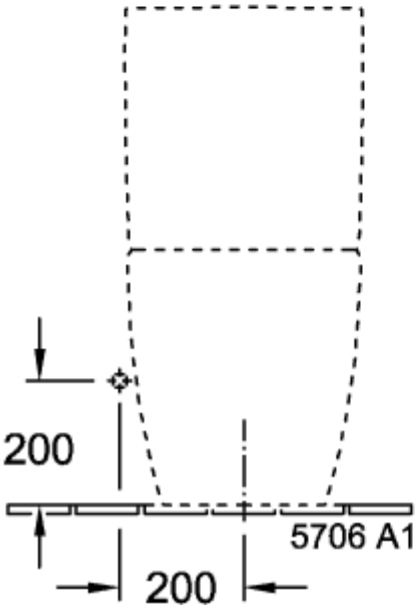
200
200
5706 A1

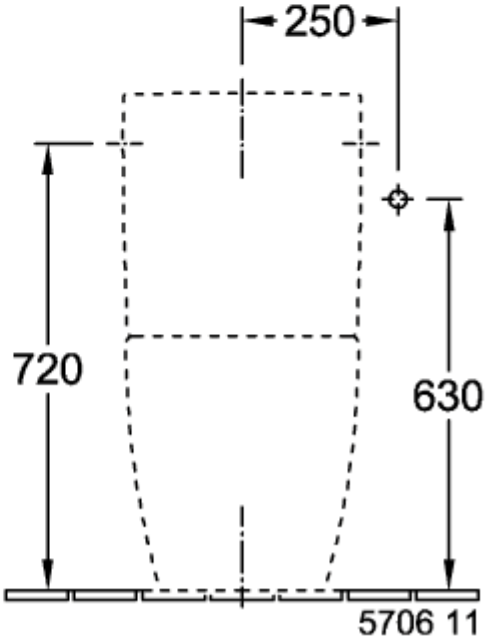
250
720
630
5706 11

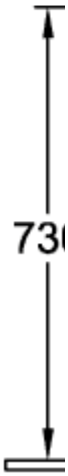

5617R001

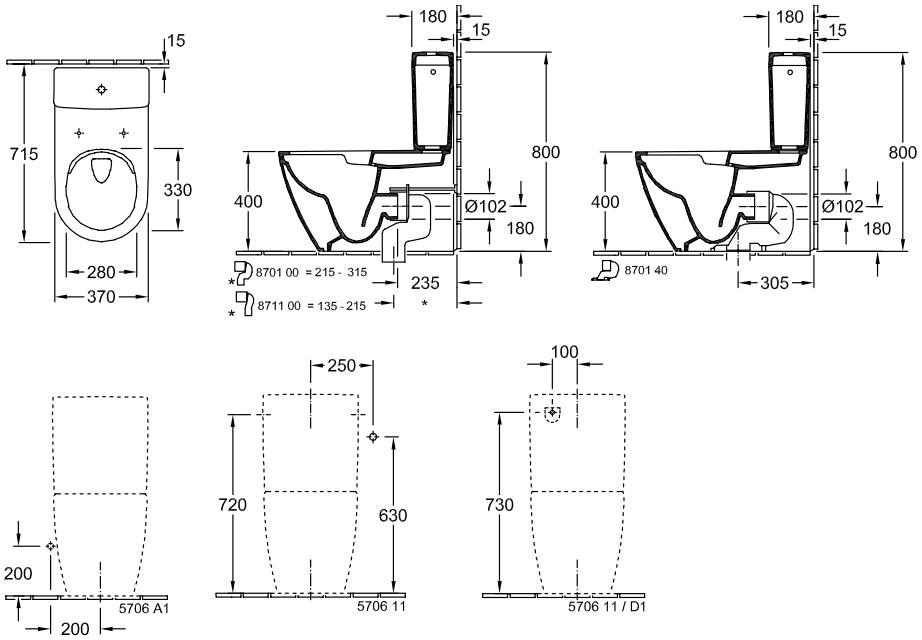
15
715
330
280
370
180
15
800
400
Ø102
180
8701 00 = 215 - 315
235
8711 00 = 135 - 215
180
15
800
400
Ø102
180
8701 40
305
250
720
630
5706 11
100
730
5706 11 / D1
200
5706 A1
200

5617R001

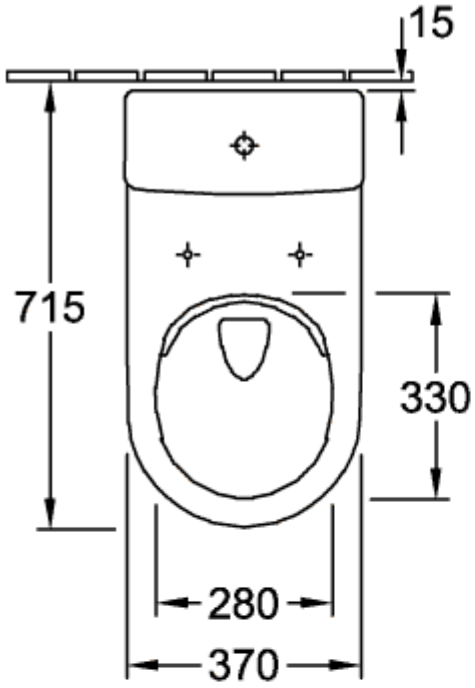
15
715
330
280
370

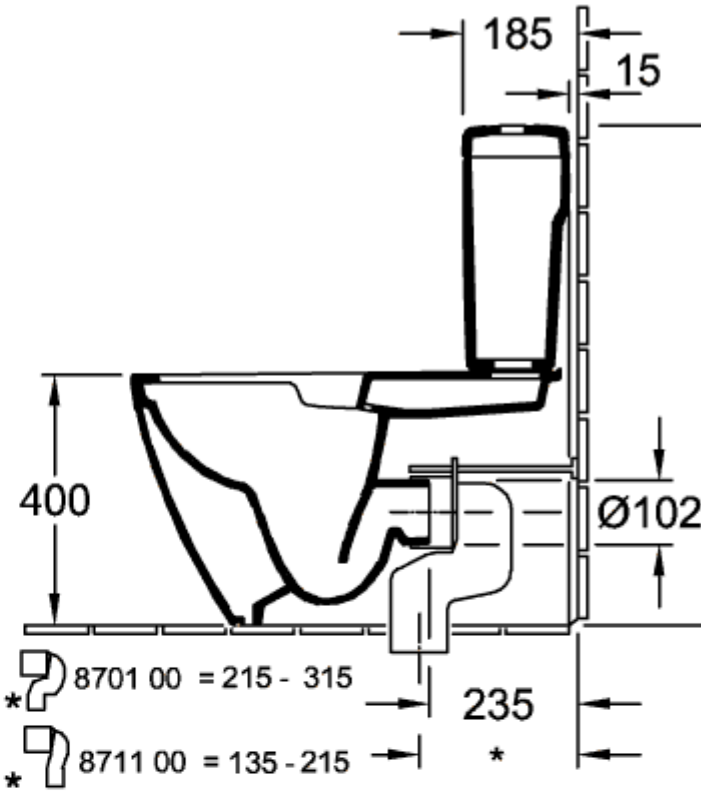
185
15
400
Ø102
8701 00 = 215 - 315
235
8711 00 = 135 - 215
*
*
*

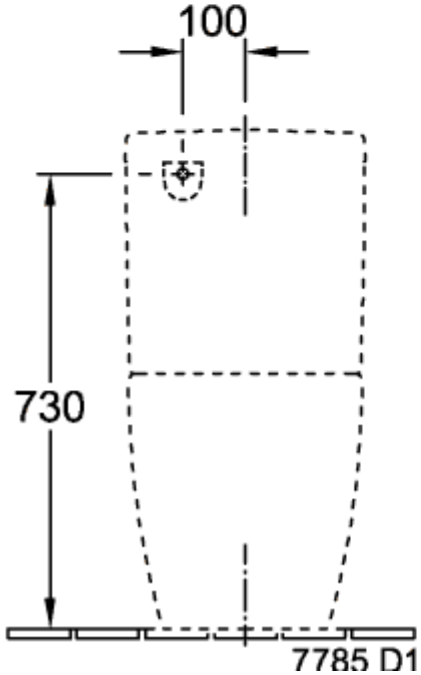
100
730
7785 D1

5617R001

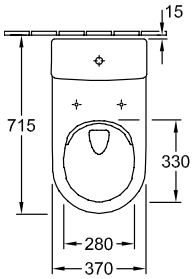
15
715
330
280
370

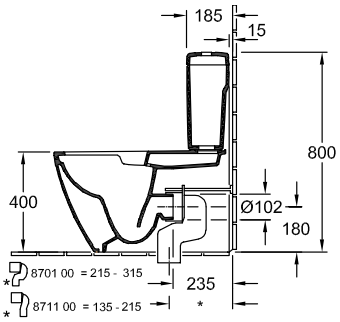
185
15
800
400
Ø102
180
8701 00 = 215 - 315
8711 00 = 135 - 215
235
*

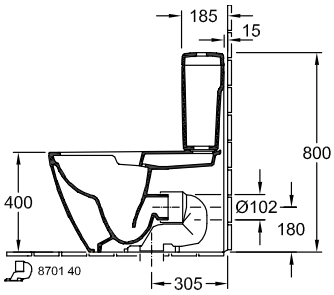
185
15
800
400
Ø102
180
8701 40
305

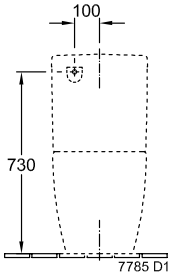
100
730
7785 D1