O.NOVO WASHBASIN OVAL

PRODUCT INFORMATION

Article title	Villeroy & Boch O.novo Washbasin, 600 x 490 x 200 mm, White Alpin, without overflow
Article number	51606101
Assembly / Assembly type	wall-mounted
Scope of delivery	1 x washbasin
Depth in mm	490
Width in mm	600
Height in mm	200
Interior depth	135
Collection	O.novo
Tap fitting / Tap hole information	Please note: unclosable outlet valve must be used with models without overflow
Suitable for	3-hole mixer
Material	Sanitary ceramics
surface	glossy
Colour name	White Alpin
With overflow	No
Shape	Oval
Colour designation	White Alpin
Antibacterial surface (with AntiBac)	No
Easy surface cleaning (CeramicPlus)	No
Number of tap holes punched through	1
Number of tap holes pre-drilled	2
Number of bowls	1

TECHNICAL DRAWINGS

51606101

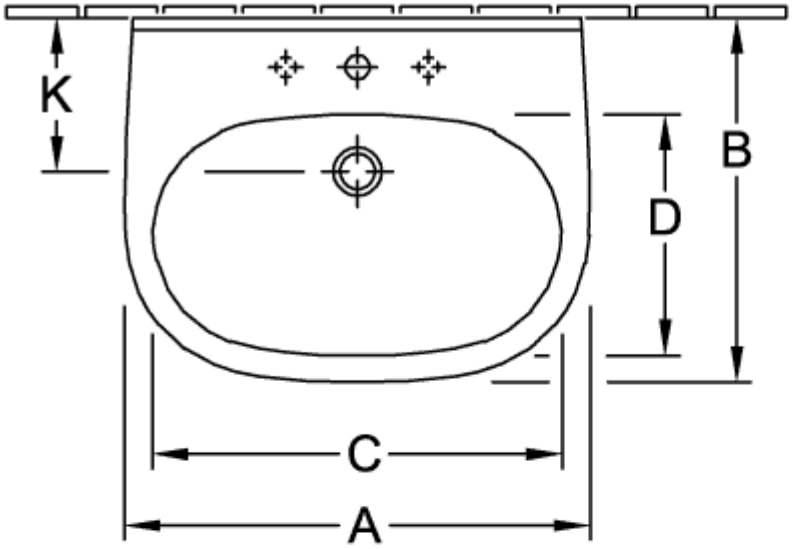

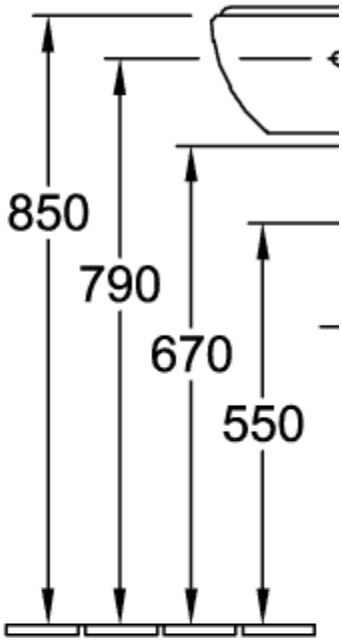

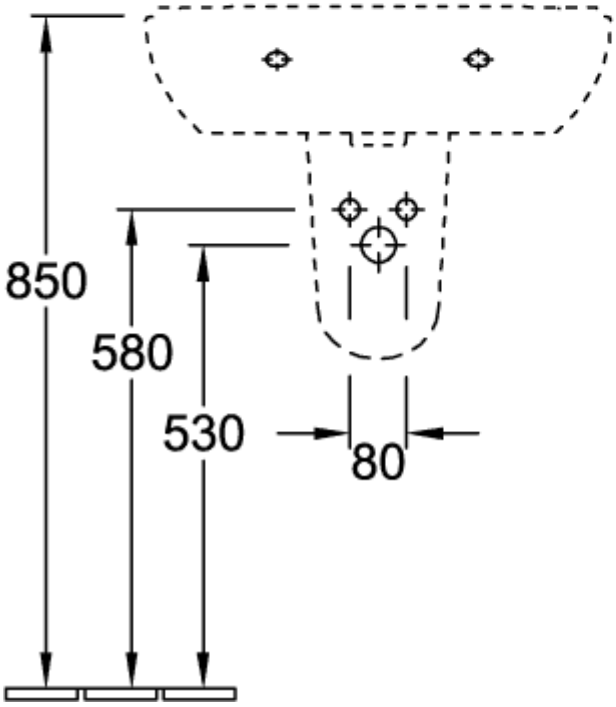

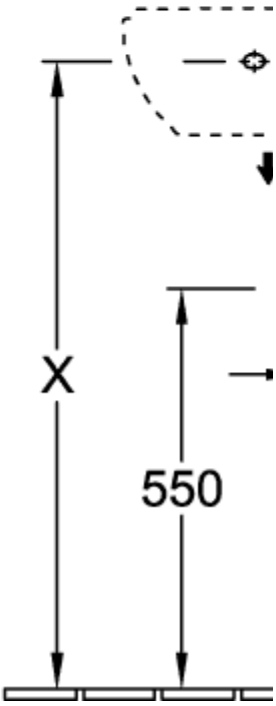

51606101

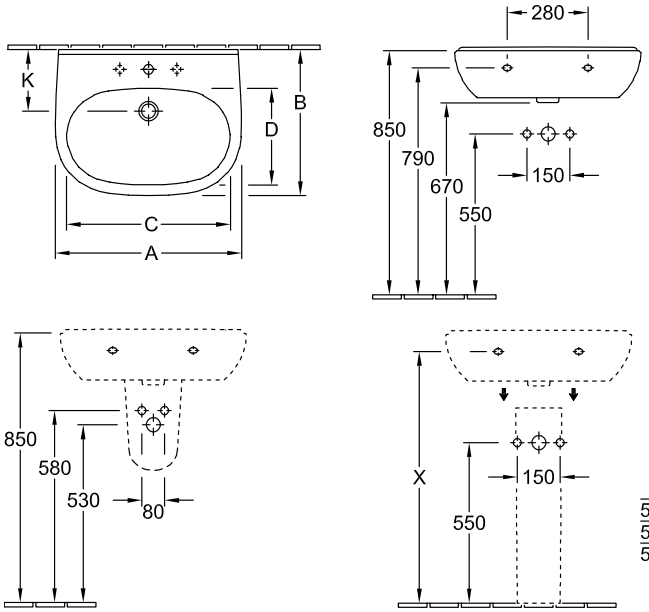

	A	B	C	D
5160 55	550	450	475	280
5160 60	600	490	525	315
5160 65	650	510	565	330

51606101

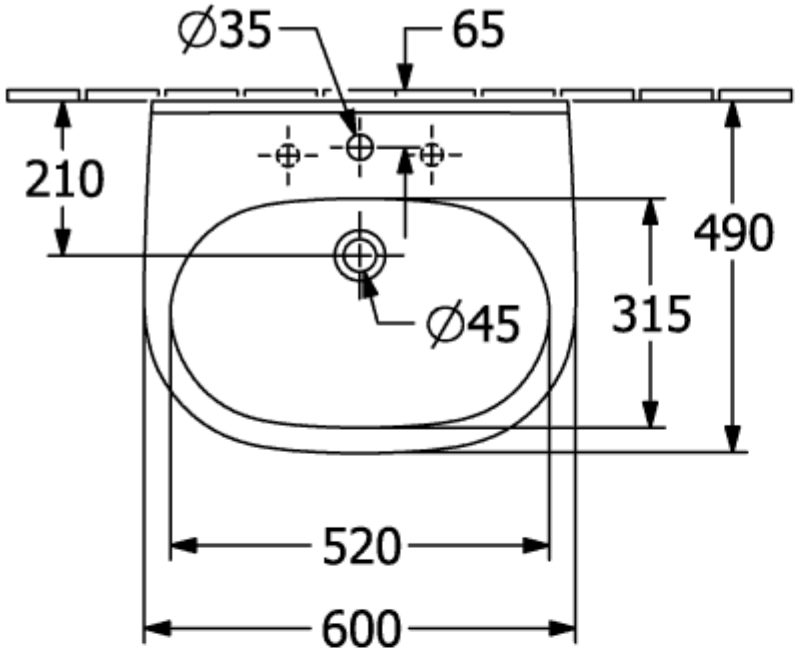

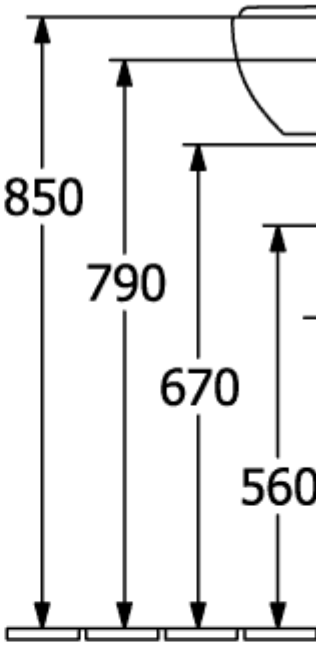

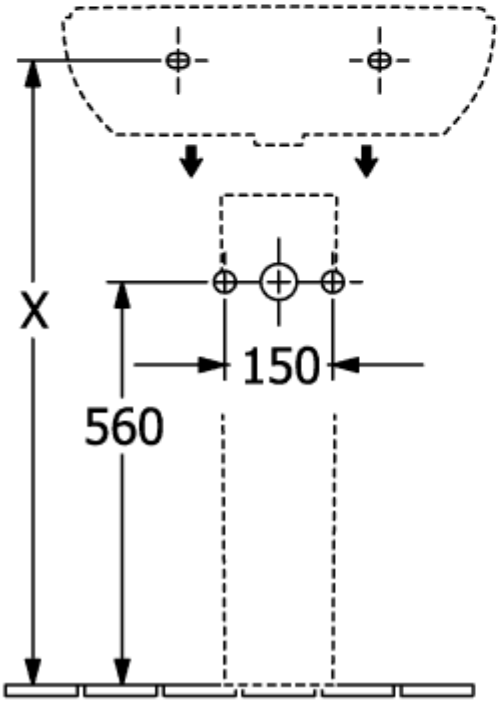

5265 00

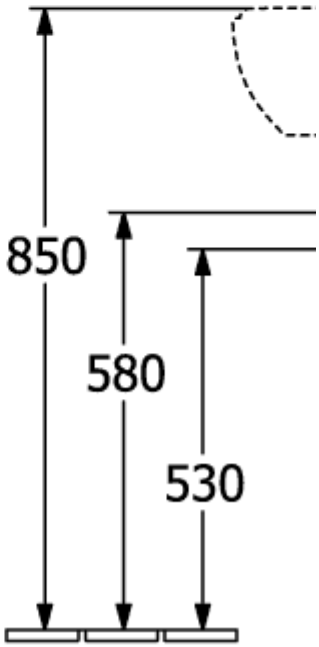

5266 00

51606101

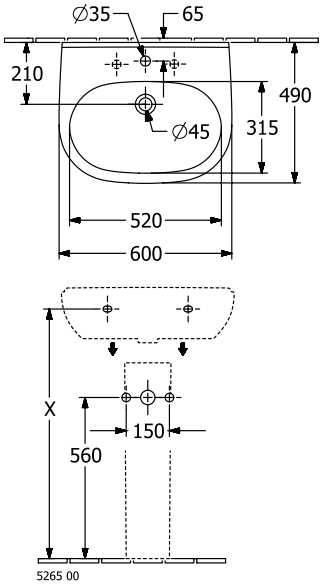
∅35
65
210
490
315
∅45
520
600
X
150
560
5265 00

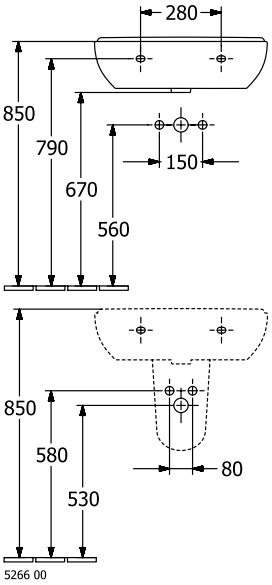
280
850
790
670
560
150
850
580
530
80
5266 00