LOOP & FRIENDS SURFACE-MOUNTED WASHBASIN ROUND

PRODUCT INFORMATION

Article title	Villeroy & Boch Loop & Friends Surface-mounted washbasin, 380 x 380 x 110 mm, White Alpin, with overflow
Article number	51480001
Assembly / Assembly type	Surface-mounted
Scope of delivery	1 x surface-mounted washbasin , 1 x extended ball rod to operate pop-up outlet valve 1 x outlet valve with ceramic valve cover 1 x fastening set 1 x cut-out template
Depth in mm	380
Width in mm	380
Height in mm	110
Interior depth	89
Diameter in mm	380
Collection	Loop & Friends
Suitable for	Wall-mounted tap fittings, Matching Villeroy&Boch furniture|Tap fitting with raised base
Material	Sanitary ceramics
surface	glossy
Colour name	White Alpin
With overflow	Yes
Shape	Round
Colour designation	White Alpin
Antibacterial surface (with AntiBac)	No
Easy surface cleaning (CeramicPlus)	No
Underside of washbasin	unground
Number of bowls	1

TECHNICAL DRAWINGS

51480001

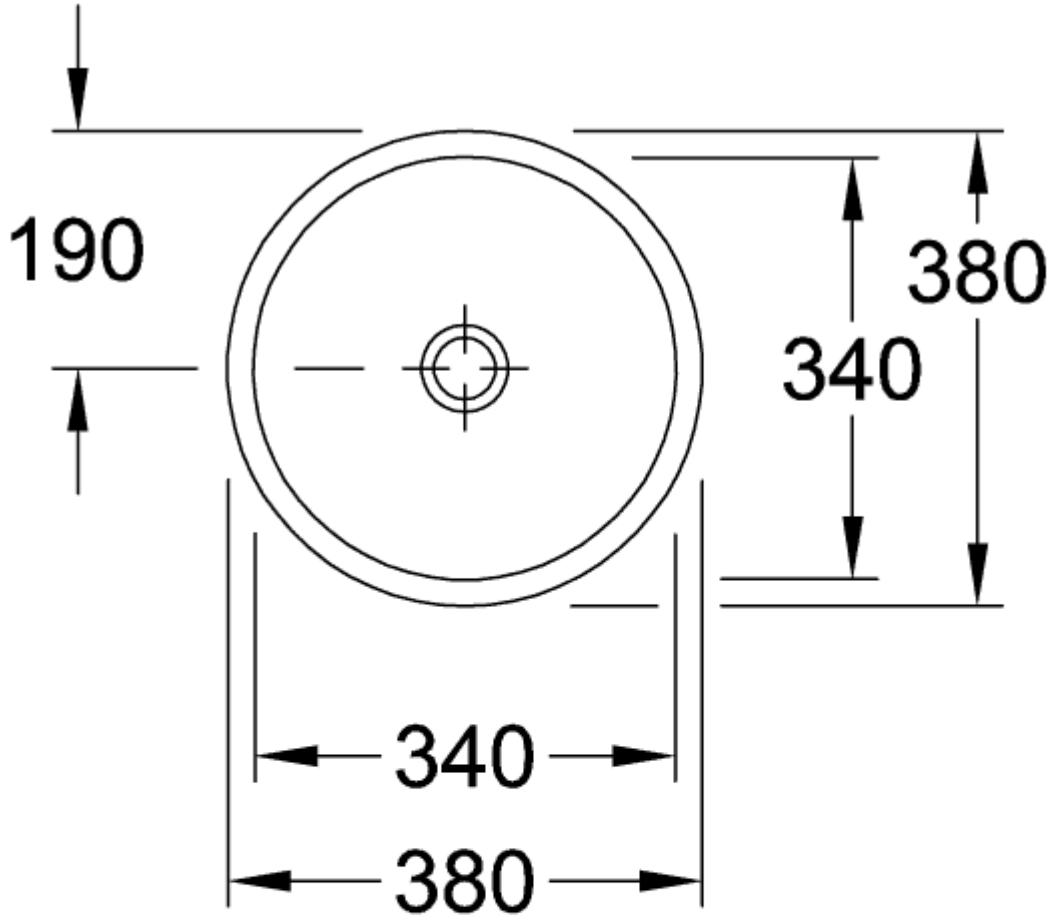

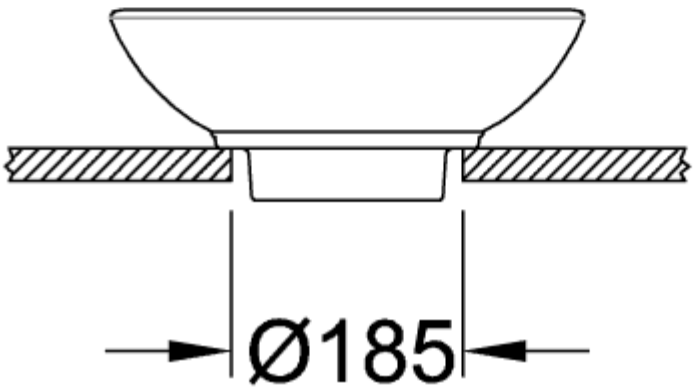

51480001

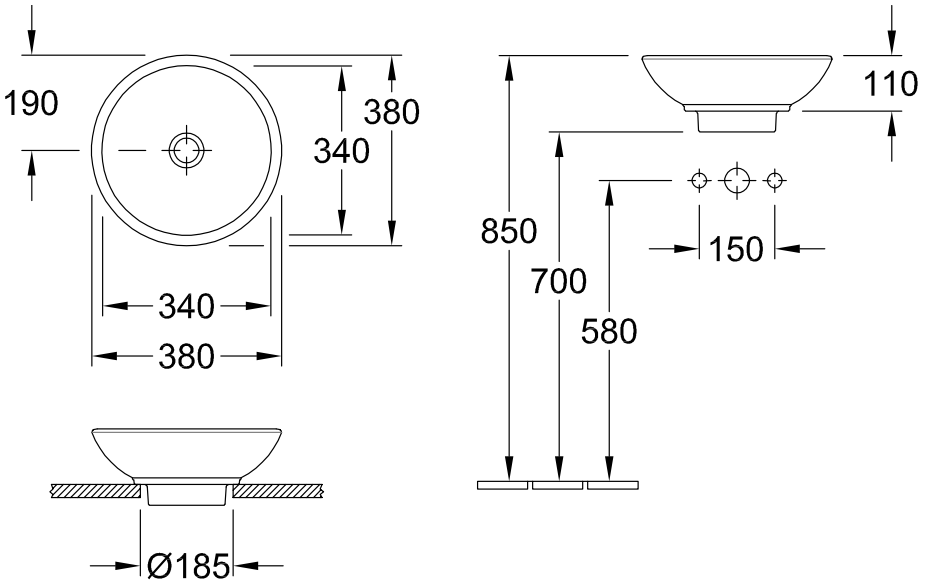

51480001

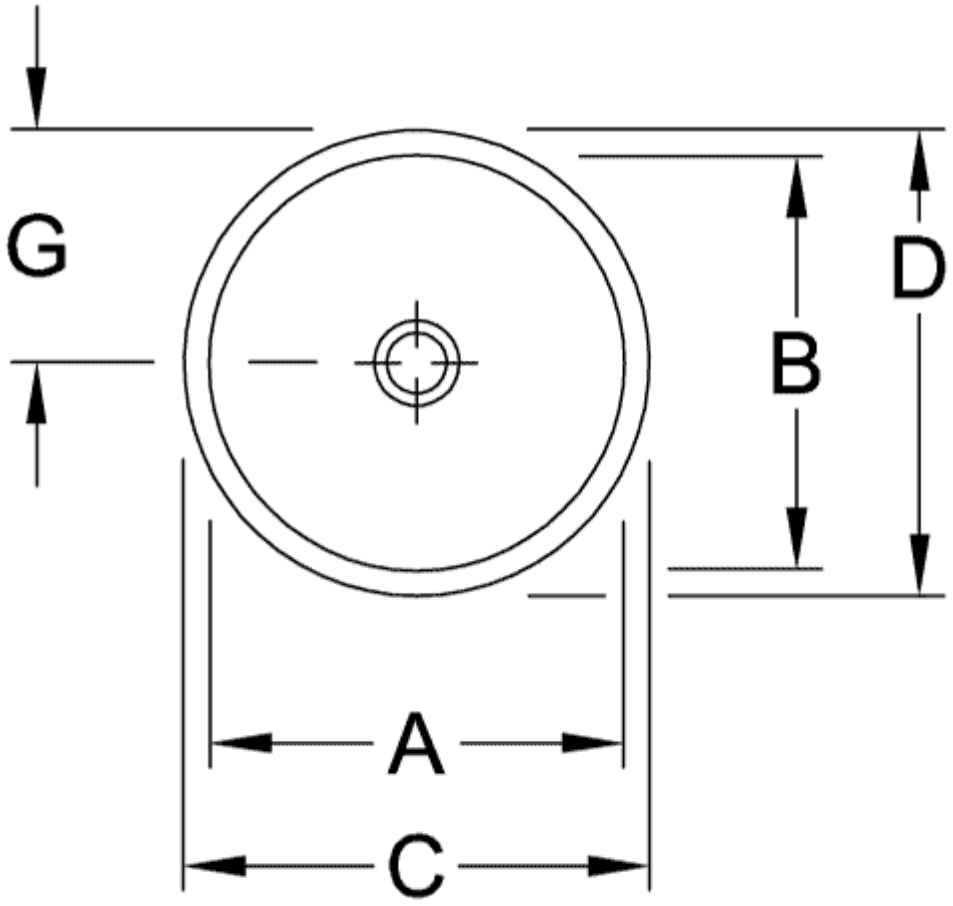

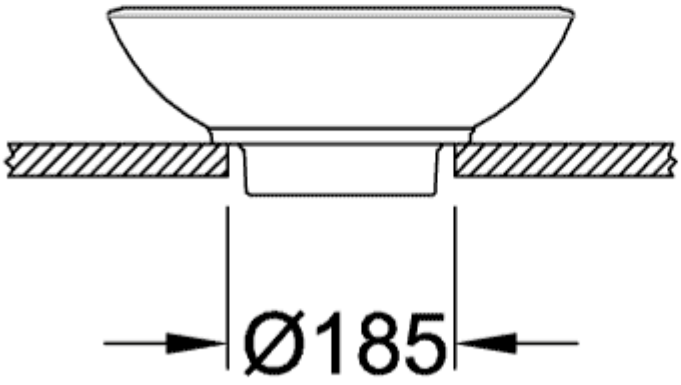

	A	B	C	D	G	H
5148 00	340	340	380	380	190	700
5144 00	390	390	430	430	215	690

51480001

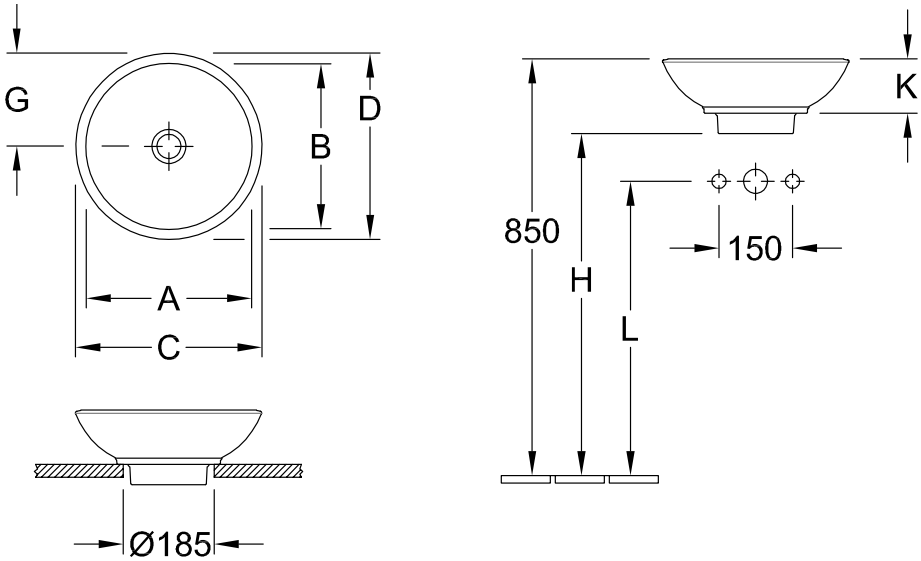

	A	B	C	D	G	H	K	L
5148 00	340	340	380	380	190	700	110	580
5144 00	390	390	430	430	215	690	120	570