MEMENTO SEMI-RECESSED WASHBASIN RECTANGLE

PRODUCT INFORMATION

Article title	Villeroy & Boch Memento Semi-recessed washbasin, 550 x 420 x 160 mm, White Alpin, with overflow, unground
Article number	41335501
Assembly / Assembly type	Semi-recessed
Scope of delivery	1 x semi-recessed washbasin , 1 x cut-out template 1 x fastening set
Depth in mm	420
Width in mm	550
Height in mm	160
Interior depth	90
Collection	Memento
Suitable for	3-hole mixer
Material	Sanitary ceramics
surface	glossy
Colour name	White Alpin
With overflow	Yes
Shape	Rectangle
Colour designation	White Alpin
Antibacterial surface (with AntiBac)	No
Easy surface cleaning (CeramicPlus)	No
Number of tap holes punched through	1
Number of tap holes pre-drilled	2
Underside of washbasin	unground
Number of bowls	1

TECHNICAL DRAWINGS

41335501

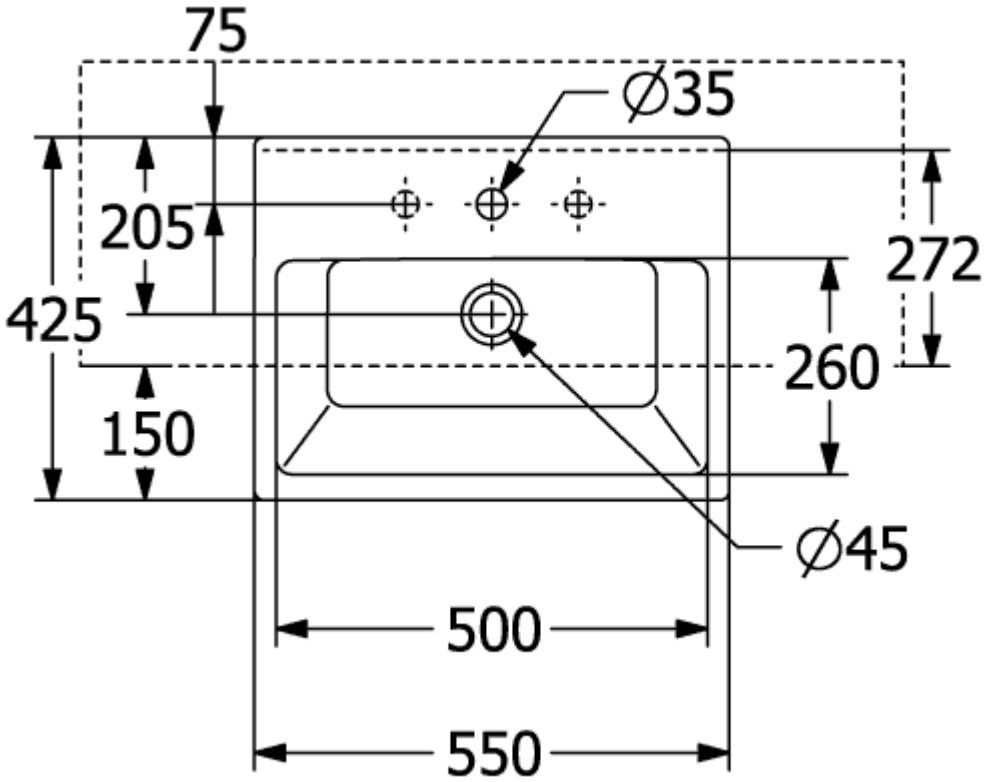
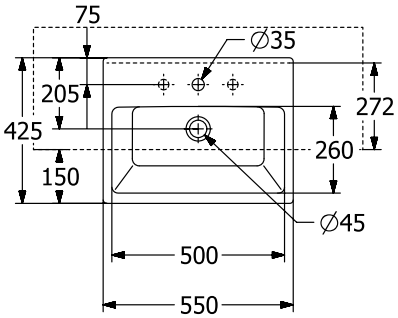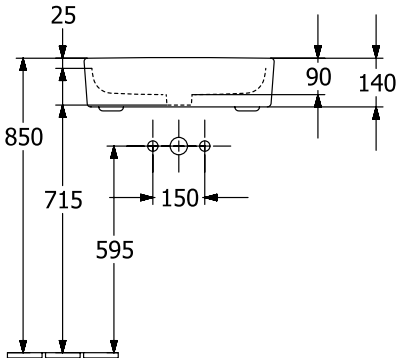
41335501