VICLEAN - I100 SHOWER TOILET, RIMLESS OVAL

PRODUCT INFORMATION

Article title	Villeroy & Boch ViClean-I100 Shower toilet, rimless, Glossy Black CeramicPlus
Article number	V0E100S0
Assembly / Assembly type	wall-mounted
Assembly instructions	Power and water connection must be available, Use only in working pressure range between 0.1 Mpa (dynamic) and 1.0 Mpa (static)|Use solely in a water temperature range between 10°C and 35°C|A water softening unit is recommended for a level of water hardness of ≥ 2.4 mmol/l (≥ 14°dH).
Scope of delivery	1 x shower toilet, rimless , 1 x remote control 1 x seat with cover 1 x fastening set 1 x water connection set
Depth in mm	595
Width in mm	385
Height in mm	400
Collection	ViClean
Suitable for	Concealed cistern, Installation system
Innovative flushing technology (with TwistFlush)	No
Flush volume l	3 / 4,5 l
Wall-mounted - floor-standing	wall-mounted
Function	• with automatic lowering mechanism (SoftClosing) • with removable seat (QuickRelease) • with warm water • with Rear wash • with Lady wash • with Comfort wash • with adjustable jet pressure • with adjustable water temperature • with adjustable nozzle position

- with automatic nozzle cleaning before and after use
- with Invisible Jet technology
- with app control

Material	Sanitary ceramics
Colour name	Glossy Black CeramicPlus
Other material	Shower nozzle: Quaryl® Toilet seat and cover: Duroplast
Design Awards	Blue Innovation Award 2018, Austria, Design Category
Shape	Oval
Colour designation	Glossy Black
Antibacterial surface (with AntiBac)	No
Easy surface cleaning (CeramicPlus)	Yes
Rimless (mit DirectFlush)	Yes
Flush type	Washdown toilet
Integrated freshness solution (with ViFresh)	No
Outlet / outlet	horizontal outlet
With overflow	No

TECHNICAL DRAWINGS

V0E100S0

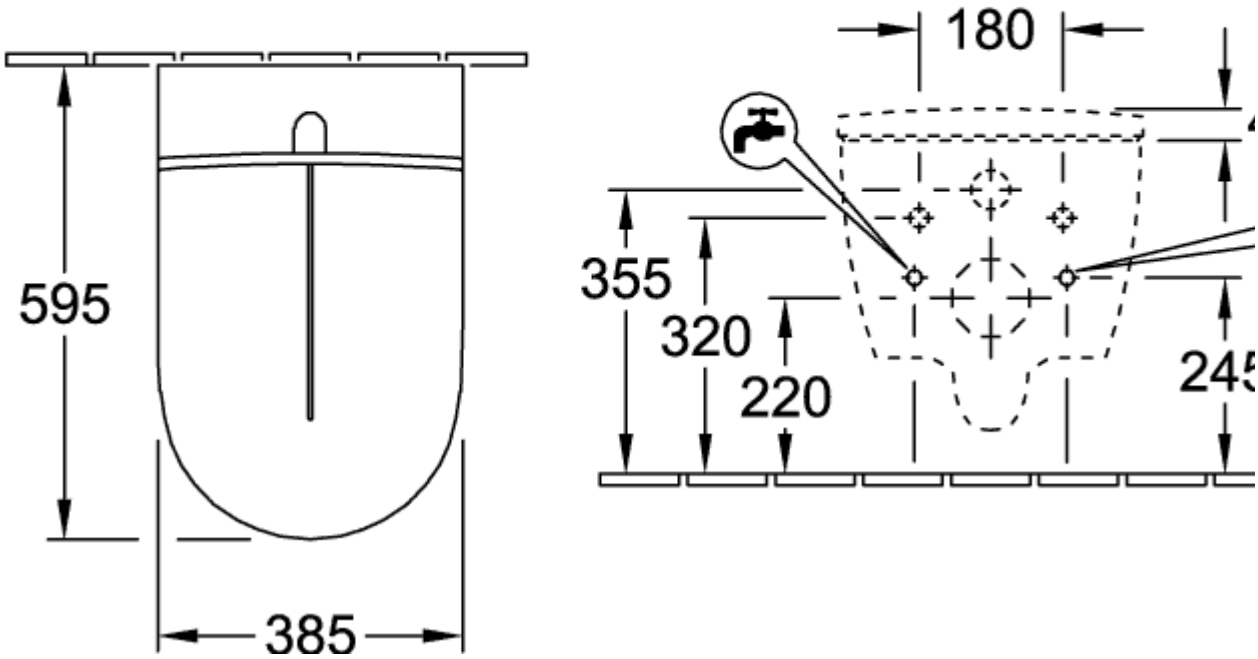
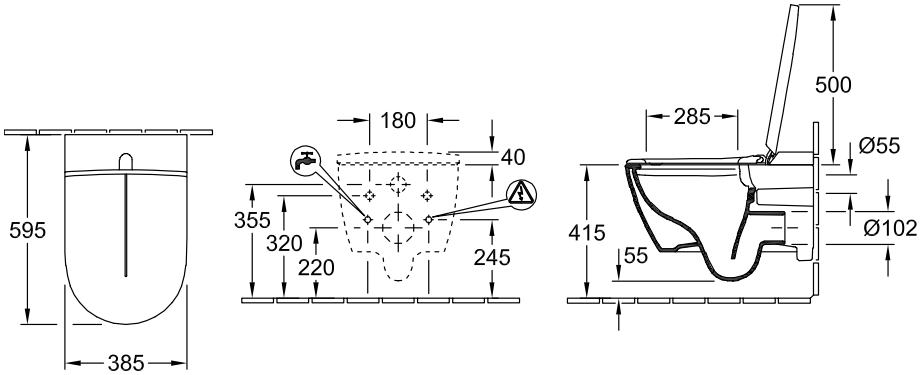
V0E100S0