ACCESSORIES INSTALLATION SET

PRODUCT INFORMATION

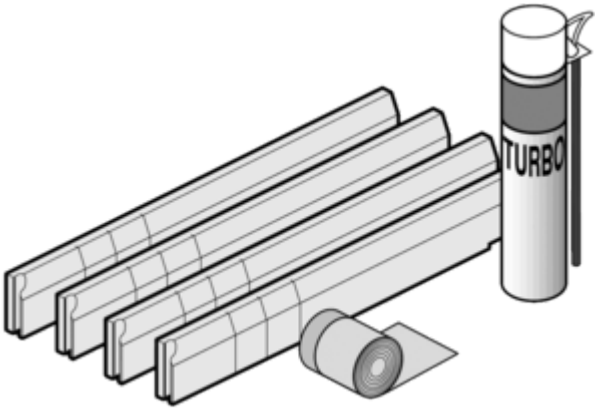

Article title	Villeroy & Boch Accessories Installation set, 250 x 1070 x 160 mm
Article number	U91411000
Scope of delivery	1 x installation set
Depth in mm	1070
Width in mm	250
Height in mm	160
Collection	Accessories