LEGATO VANITY UNIT ANGULAR

PRODUCT INFORMATION

Article title	Villeroy & Boch Legato Vanity unit, with lighting, 2 pull-out compartments, 1000 x 550 x 500 mm, Glossy White / Glossy White
Article number	B695L0DH
Assembly / Assembly type	wall-mounted
Type of opening	2 pull-out compartments
Equipment	1 x wide glass drawer divider , 2 x narrow glass drawer divider 1 x accessory box L 2 x pull-out compartment with non-slip mat
Scope of delivery	1 x vanity unit , 1 x fastening set
Position of washbasin	washbasin on the middle
Depth in mm	500
Width in mm	1000
Height in mm	550
Collection	Legato
Tap fitting / Tap hole information	no 3-hole tap fitting possible
Suitable for	selected washbasins
Function	• with SoftClosing • with lighting
Material front	MDF
Surface of front	Acrylic film
Material body	MDF
Surface of body	Acrylic film
Material cover panel	Chipboard
Shape	Angular
Colour designation	Glossy White
Colour designation of cover panel	Glossy White
With lighting	Yes
Smart home compatible	No

TECHNICAL DRAWINGS

B695L0DH

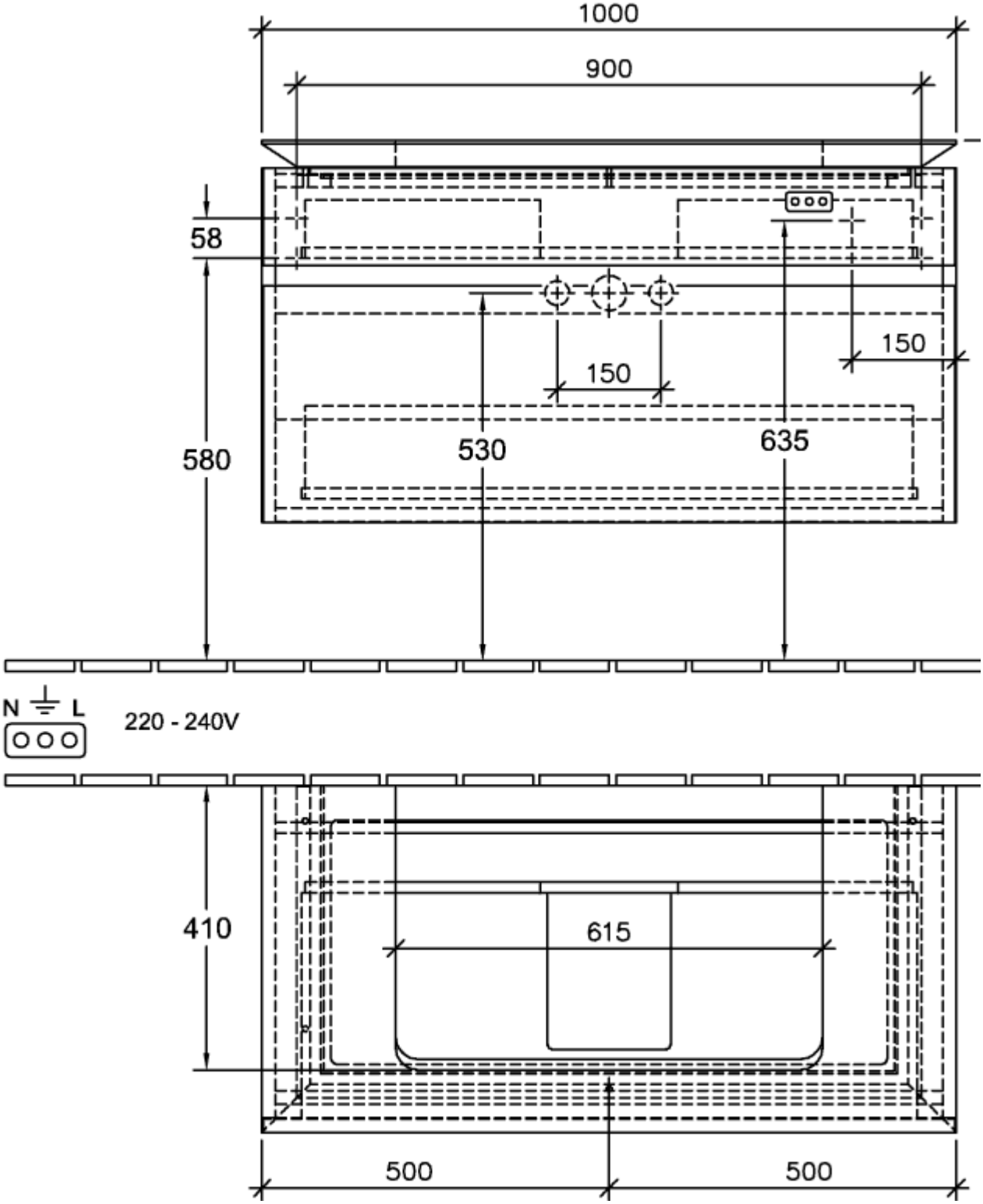

B695L0DH

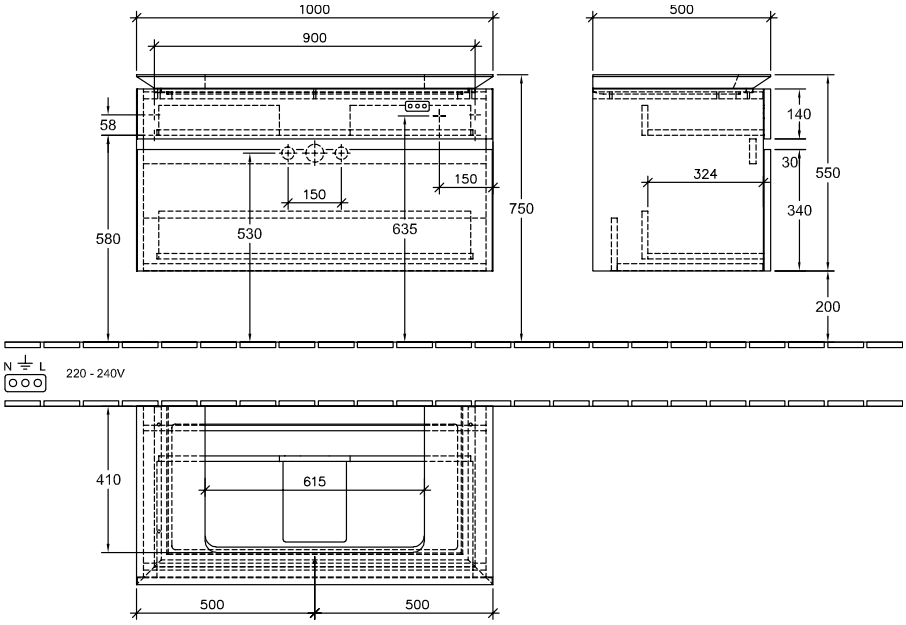
1000
900
500
58
140
30
550
324
150
150
750
340
580
530
635
200
N
L
220 - 240V
410
615
500
500