# ACCESSORIES VARIO DRAINBEND

## PRODUCT INFORMATION

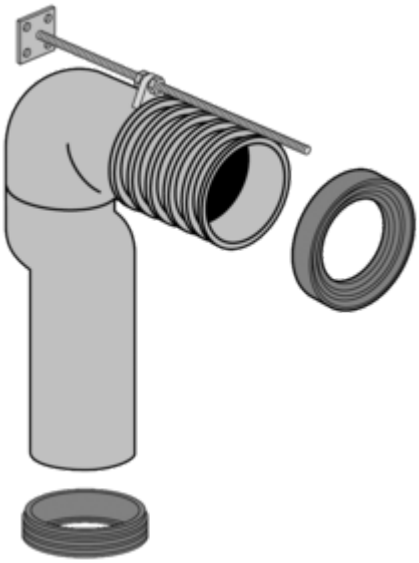

| | |
|---|---|
| Article title | Villeroy & Boch Accessories Vario drainbend, 380 x 550 x 120 mm |
| Article number | 87110000 |
| Scope of delivery | 1 x Vario drainbend , 1 x fastening set |
| Depth in mm | 550 |
| Width in mm | 380 |
| Height in mm | 120 |
| Diameter in mm | 100 |
| Collection | Accessories |
| Material | Plastic |