O.NOVO CISTERN

PRODUCT INFORMATION

Article title	Villeroy & Boch O.novo Cistern, water inlet from the sides or rear, White Alpin
Article number	7796G101
Scope of delivery	1 x cistern , 1 x fastening set
Depth in mm	180
Width in mm	355
Height in mm	370
Collection	O.novo
Material	Sanitary ceramics
Colour name	White Alpin
Other material	Push button: ABS Flushing mechanism: Plastic
Other surfaces	Push button: chrome, glossy, Flushing mechanism: glossy
Colour designation	White Alpin
Other colour designations	Push button: Chrome, Flushing mechanism: White Alpin

TECHNICAL DRAWINGS

7796G101

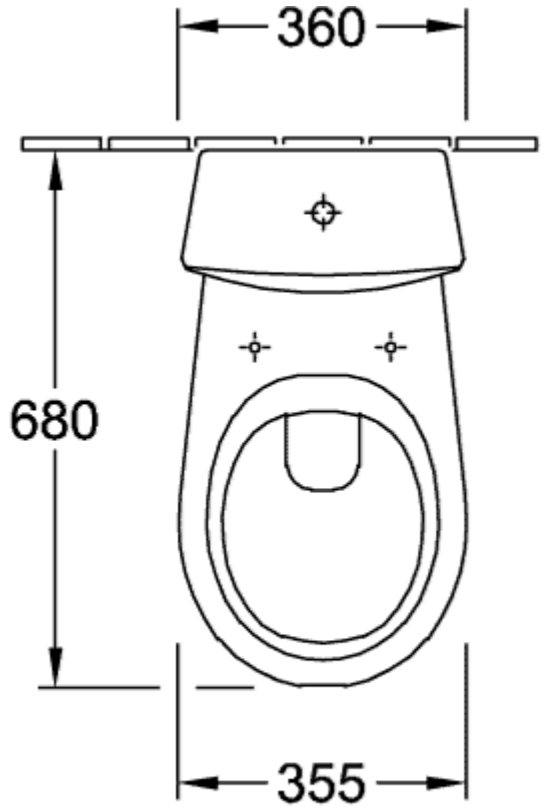
360
680
355

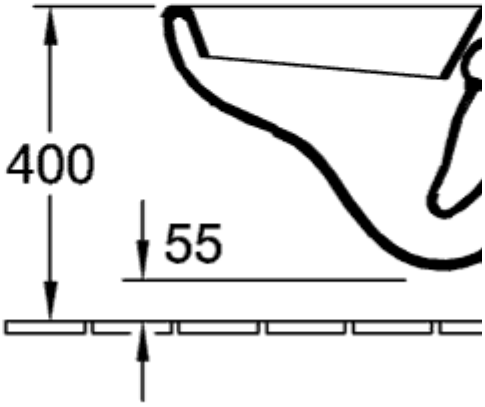
400
55

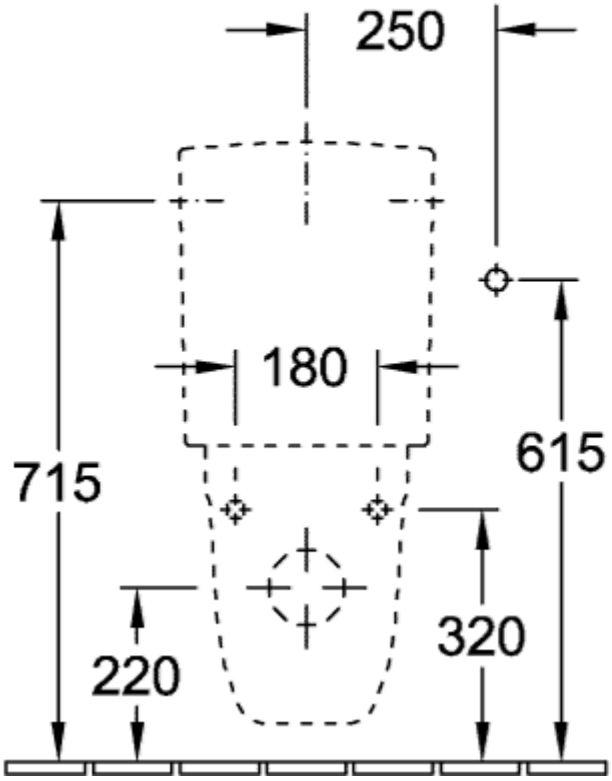
250
180
715
615
220
320

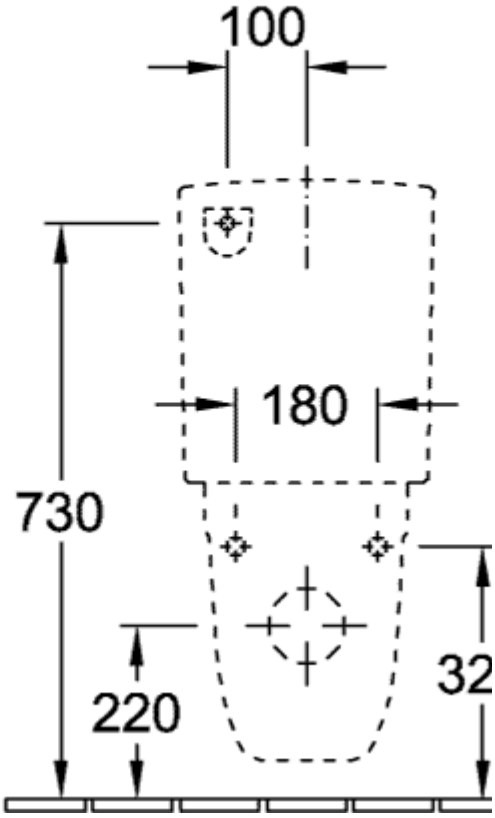
100
180
730
220
32

7796G101

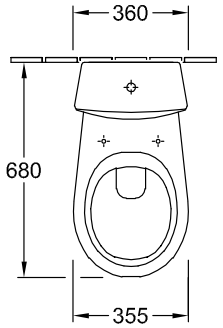
360
680
355

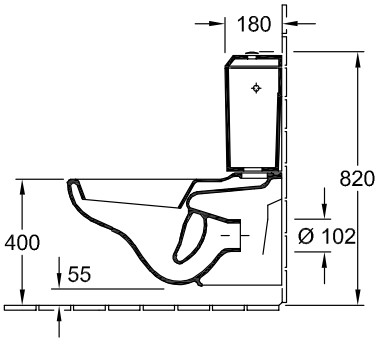
180
820
400
Ø 102
55

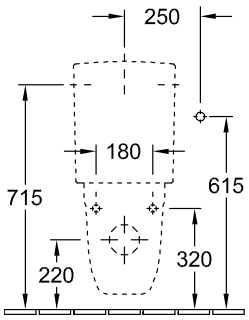
250
180
715
615
220
320

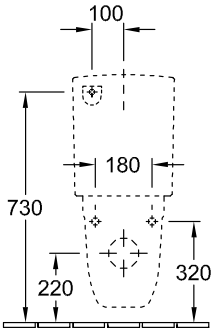
100
180
730
220
320