VICARE WASHBASIN VICARE RECTANGLE

PRODUCT INFORMATION

Article title	Villeroy & Boch ViCare Washbasin ViCare, 600 x 490 x 180 mm, White Alpin, with overflow
Article number	71196301
Assembly / Assembly type	wall-mounted
Scope of delivery	1 x washbasin , 1 x overflow fitting
Depth in mm	490
Width in mm	600
Height in mm	180
Interior depth	140
Collection	ViCare
Suitable for	3-hole mixer, Accessible application
Material	Sanitary ceramics
surface	glossy
Colour name	White Alpin
With overflow	Yes
Shape	Rectangle
Colour designation	White Alpin
Antibacterial surface (with AntiBac)	No
Easy surface cleaning (CeramicPlus)	No
Number of tap holes punched through	1
Number of tap holes pre-drilled	2
Number of bowls	1

TECHNICAL DRAWINGS

71196301

DE

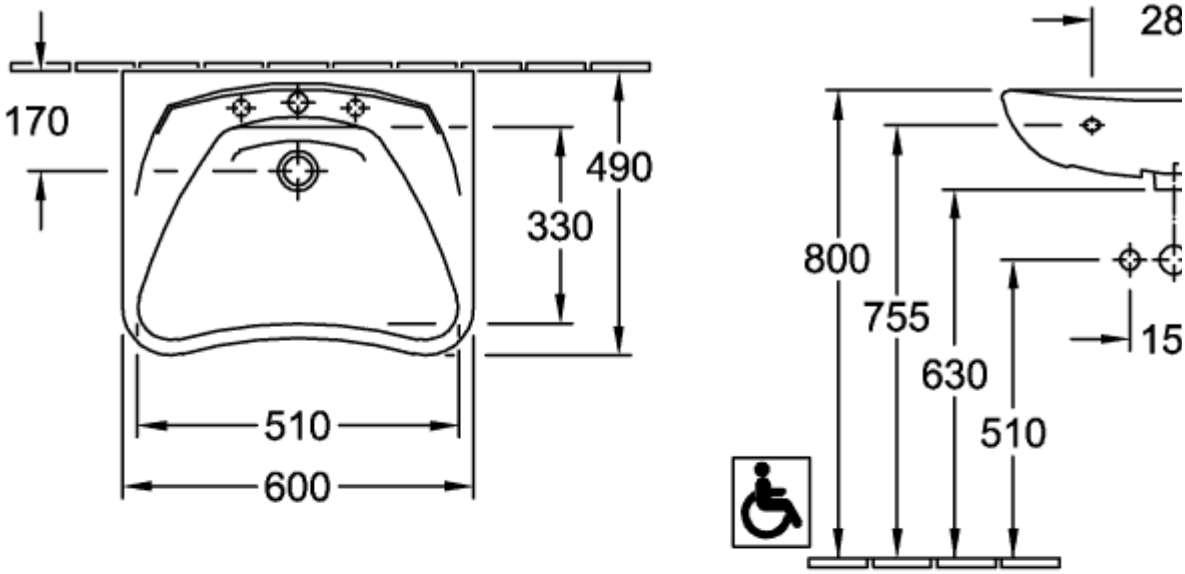

FR+

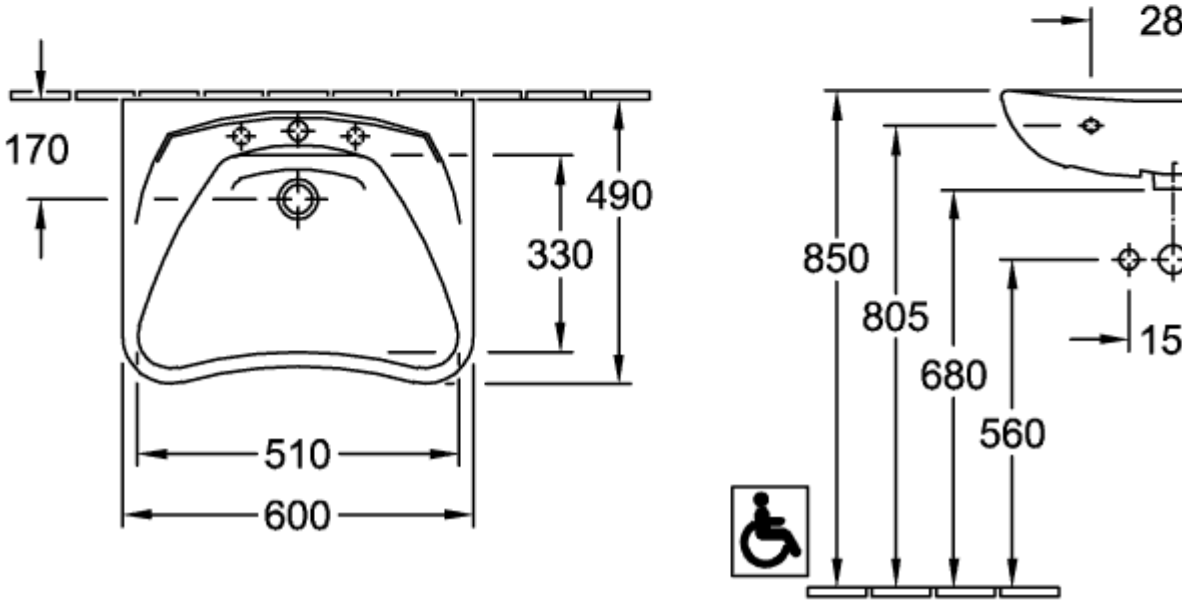

71196301

DE

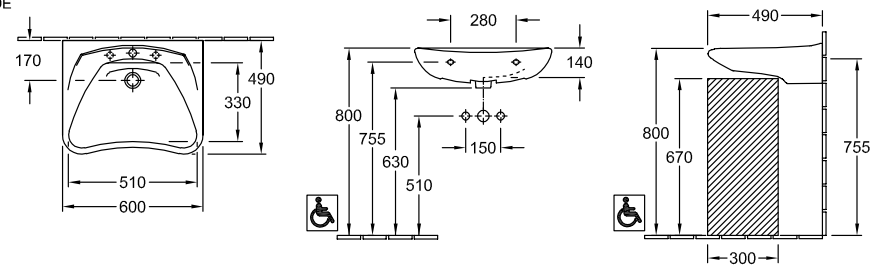
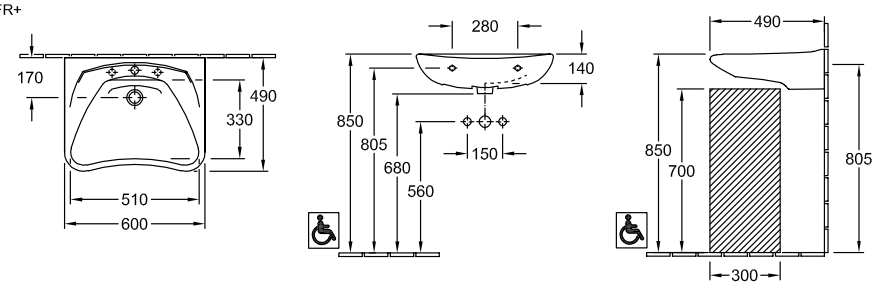
FR+