SUBWAY WASHOUT TOILET OVAL

PRODUCT INFORMATION

Article title	Villeroy & Boch Subway Washout toilet, wall-mounted, White Alpin
Article number	66031001
Assembly / Assembly type	wall-mounted
Scope of delivery	1 x washout toilet , 1 x fastening set
Depth in mm	560
Width in mm	370
Height in mm	365
Collection	Subway
Suitable for	Concealed cistern
Innovative flushing technology (with TwistFlush)	No
Flush volume l	3 / 6 l
Wall-mounted - floor-standing	wall-mounted
Material	Sanitary ceramics
surface	glossy
Colour name	White Alpin
Shape	Oval
Colour designation	White Alpin
Antibacterial surface (with AntiBac)	No
Easy surface cleaning (CeramicPlus)	No
Rimless (mit DirectFlush)	No
Flush type	Wash-out toilet
Integrated freshness solution (with ViFresh)	No
Outlet / outlet	horizontal outlet

TECHNICAL DRAWINGS

66031001

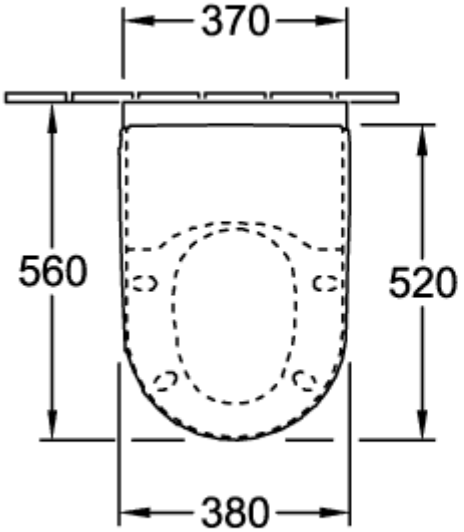

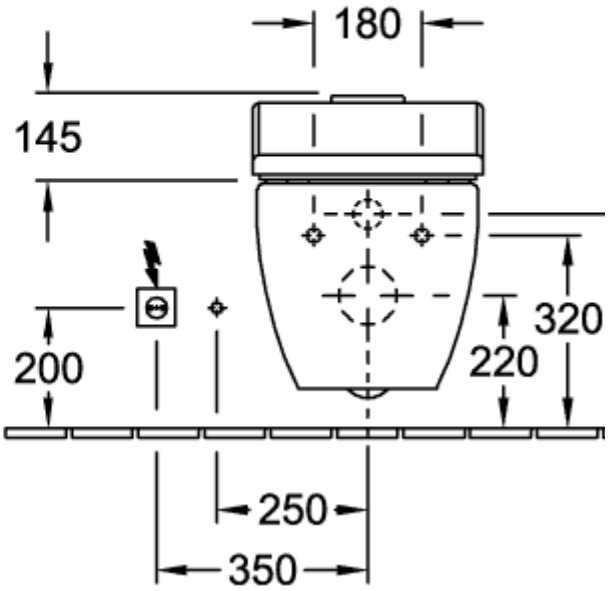

66031001

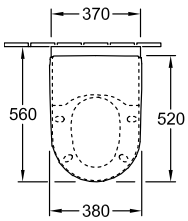

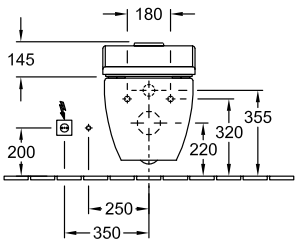

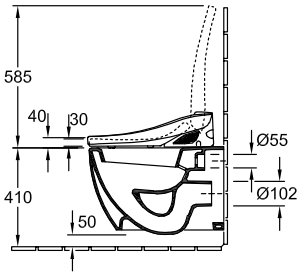

66031001

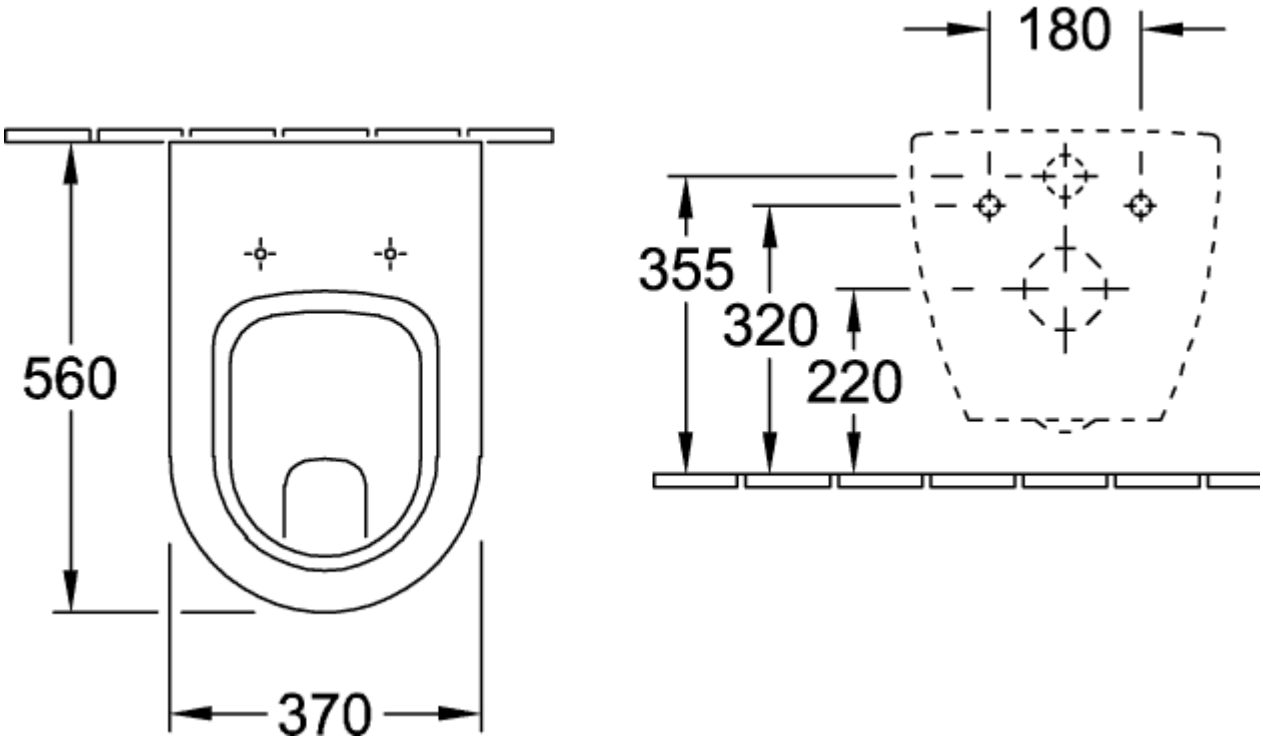
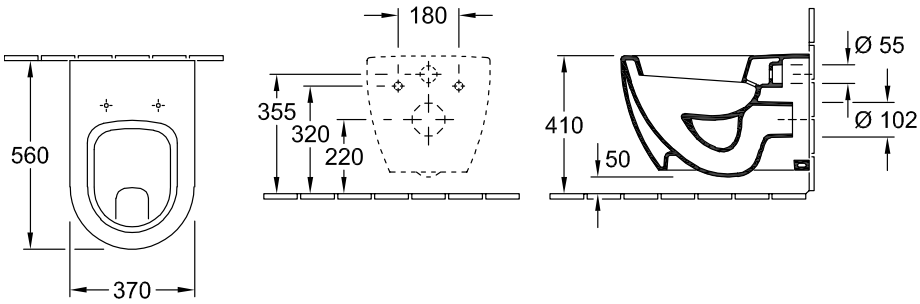
66031001