SUBWAY INFINITY RECTANGULAR SHOWER TRAY RECTANGLE

PRODUCT INFORMATION

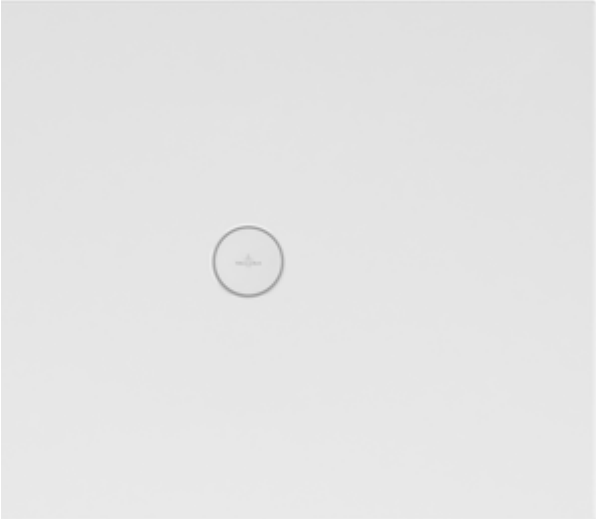

Article title	Villeroy & Boch Subway Infinity Rectangular shower tray, 900 x 800 x 40 mm, White Alpin
Article number	6229E301
Assembly / Assembly type	flush-fitting installation, Installation on tiles|Installation on a base
Assembly instructions	The installation height of the shower tray can be reduced by 30 mm if the outlet fitting 9226 00 XX is used. Attention! This outlet fitting does not conform to EN274., These shower trays are cut on the short side and must be positioned with the cut side (not glazed) against the wall.
Scope of delivery	1 x rectangular shower tray
Length in mm	900
Width in mm	800
Height in mm	40
Interior depth	12
Collection	Subway Infinity
Material	Sanitary ceramics
surface	matt
Colour name	White Alpin
Shape	Rectangle
Colour designation	White Alpin
Antibacterial surface (with AntiBac)	No
Easy surface cleaning (CeramicPlus)	No
With slip resistance	Yes

TECHNICAL DRAWINGS

6229E301

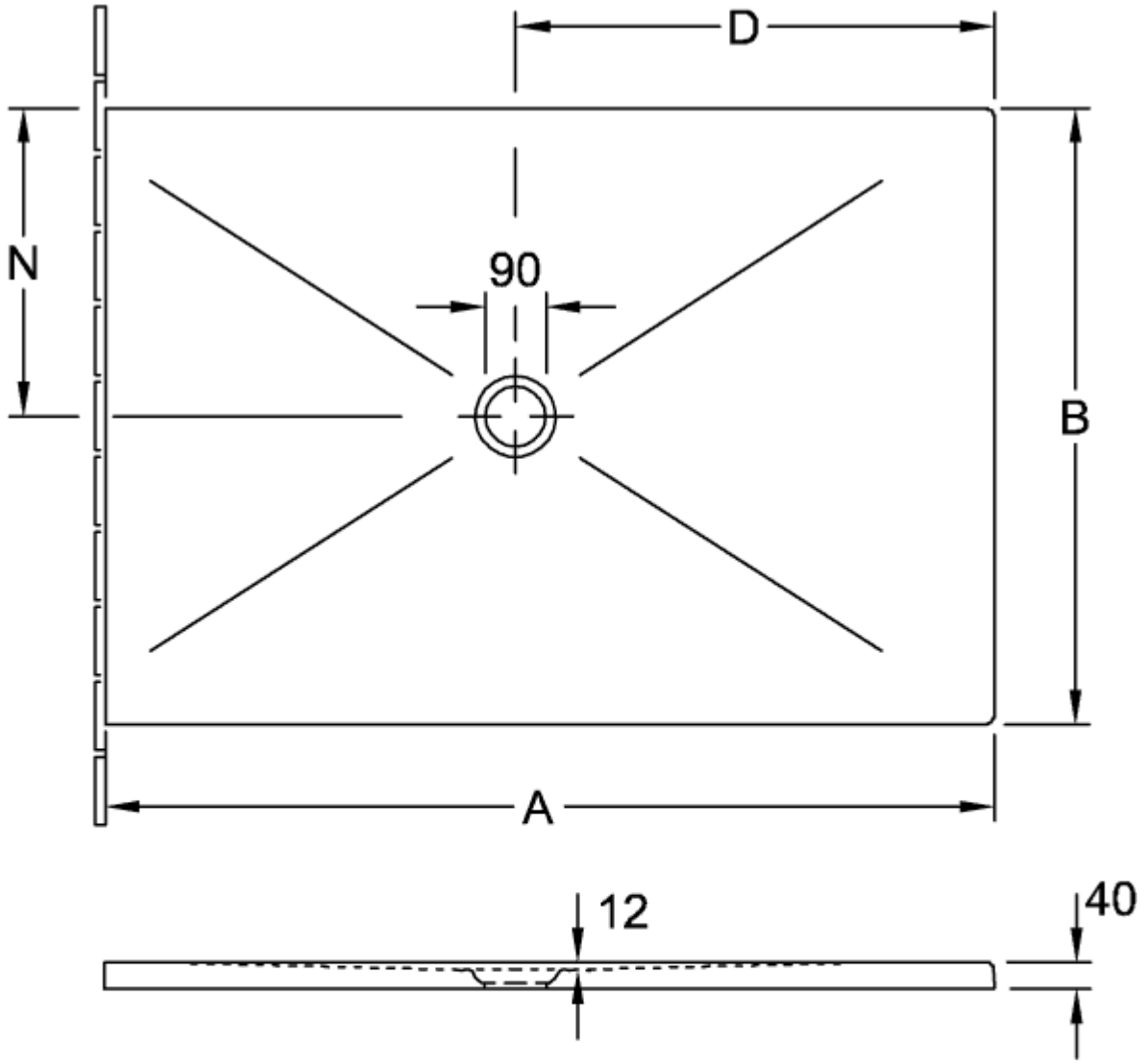

	A	B	D	N
6232 W5	1500	1000	800	500
6231 R4	1300	900	700	450
6230 M4	1100	900	600	450
6229 E3	900	800	500	400
6228 K4	900	1000	500	500

6229E301

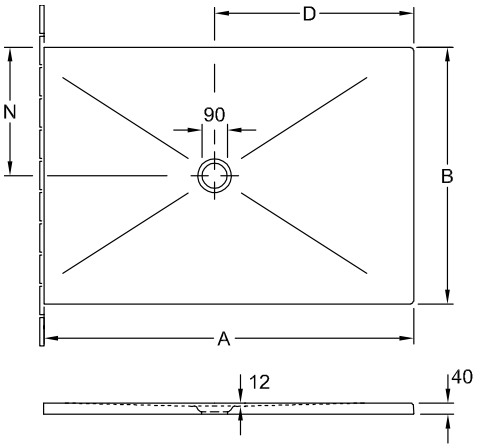

	A	B	D	N
6232 W5	1500	1000	800	500
6231 R4	1300	900	700	450
6230 M4	1100	900	600	450
6229 E3	900	800	500	400
6228 K4	900	1000	500	500