O.NOVO PLUS RECTANGULAR SHOWER TRAY RECTANGLE

PRODUCT INFORMATION

Article title	Villeroy & Boch O.novo Plus Rectangular shower tray, 1200 x 800 x 60 mm, White Alpin
Article number	6210K301
Assembly / Assembly type	Surface-mounted, flush-fitting installation
Assembly instructions	This shower tray is glazed on three sides - Please see technical drawing.
Scope of delivery	1 x rectangular shower tray
Length in mm	1200
Width in mm	800
Height in mm	60
Interior depth	40
Collection	O.novo Plus
Material	Sanitary ceramics
surface	glossy
Colour name	White Alpin
Shape	Rectangle
Colour designation	White Alpin
Antibacterial surface (with AntiBac)	No
Easy surface cleaning (CeramicPlus)	No
With slip resistance	Yes

TECHNICAL DRAWINGS

6210K301

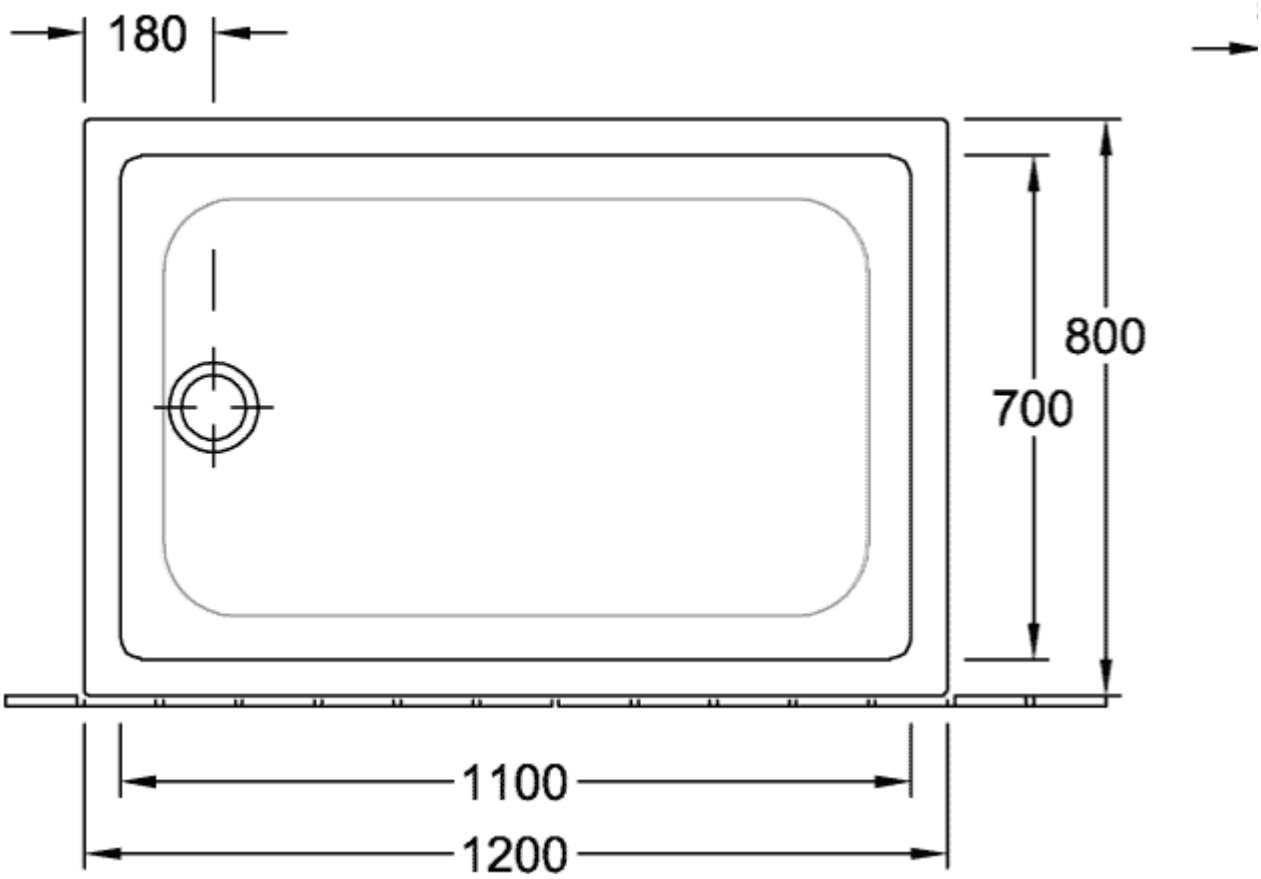
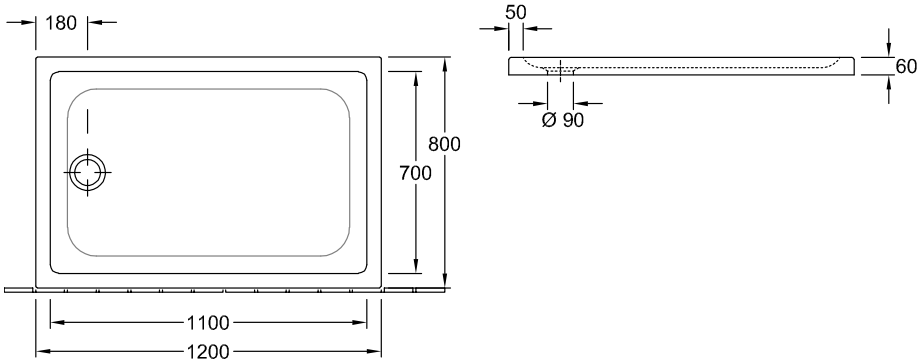
6210K301