LOOP & FRIENDS UNDERCOUNTER WASHBASIN RECTANGLE

PRODUCT INFORMATION

Article title	Villeroy & Boch Loop & Friends Undercounter washbasin, 615 x 380 x 185 mm, White Alpin, without overflow
Article number	61632101
Assembly / Assembly type	Undercounter
Assembly instructions	the hole for the washbasin can only be cut out using the original washbasin because tolerances of several millimetres are possible, installation possible in natural stone and laminate countertops
Scope of delivery	1 x undercounter washbasin , 1 x fastening set
Depth in mm	380
Width in mm	615
Height in mm	185
Interior depth	140
Collection	Loop & Friends
Tap fitting / Tap hole information	Please note: unclosable outlet valve must be used with models without overflow
Material	Sanitary ceramics
surface	glossy
Colour name	White Alpin
With overflow	No
Shape	Rectangle
Colour designation	White Alpin
Antibacterial surface (with AntiBac)	No
Easy surface cleaning (CeramicPlus)	No
Number of bowls	1

TECHNICAL DRAWINGS

61632101

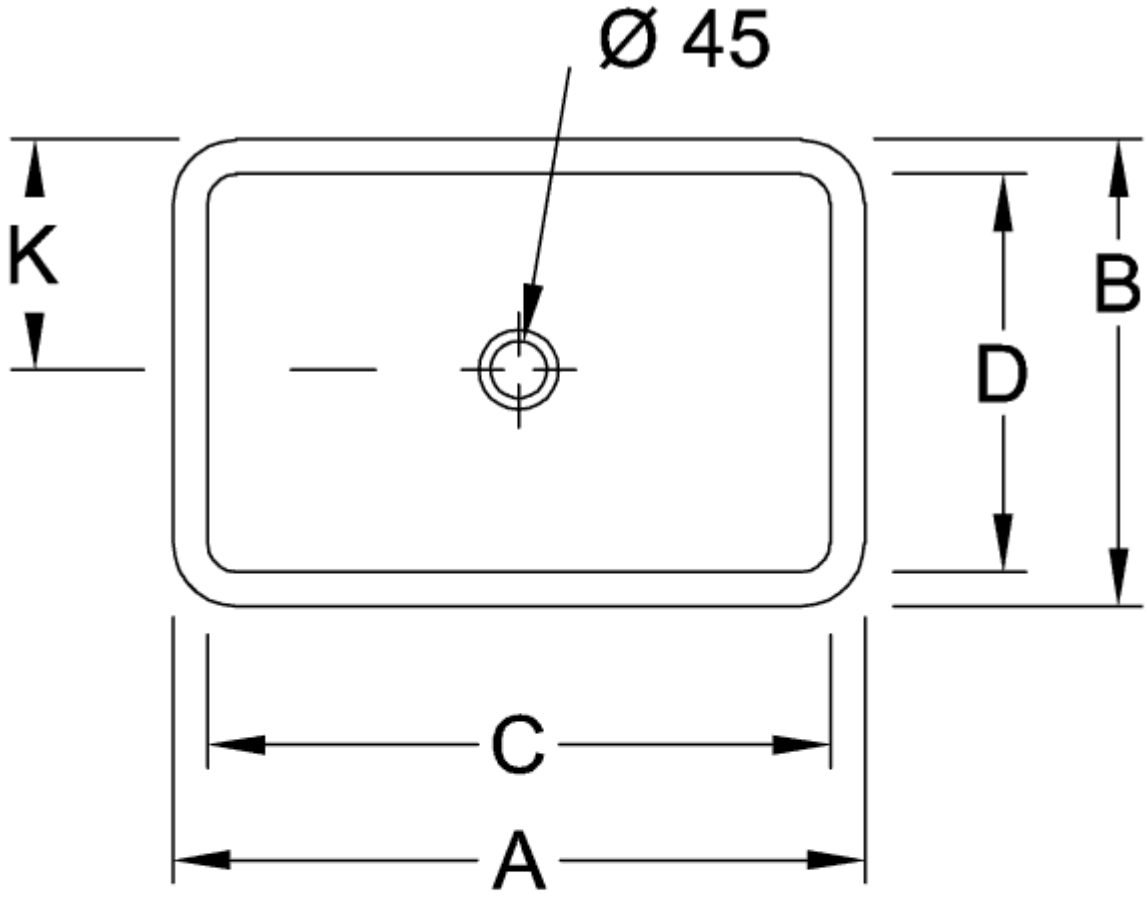

	A	B	C	D	K	M	N
6163 10	510	340	450	280	170	160	115
6163 11	510	340	450	280	170	160	115
6163 00	600	405	540	340	203	180	120
6163 01	600	405	540	340	203	180	120
6163 20	675	450	615	380	225	180	140
6163 21	675	450	615	380	225	180	140

61632101

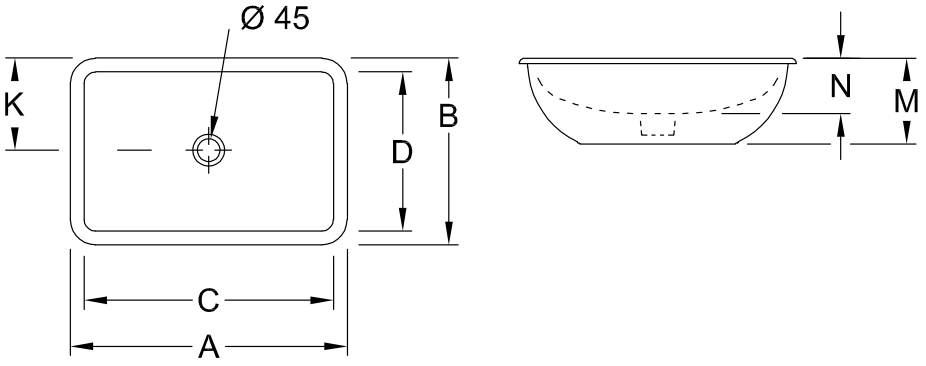

	A	B	C	D	K	M	N
6163 10	510	340	450	280	170	160	115
6163 11	510	340	450	280	170	160	115
6163 00	600	405	540	340	203	180	120
6163 01	600	405	540	340	203	180	120
6163 20	675	450	615	380	225	180	140
6163 21	675	450	615	380	225	180	140

61632101

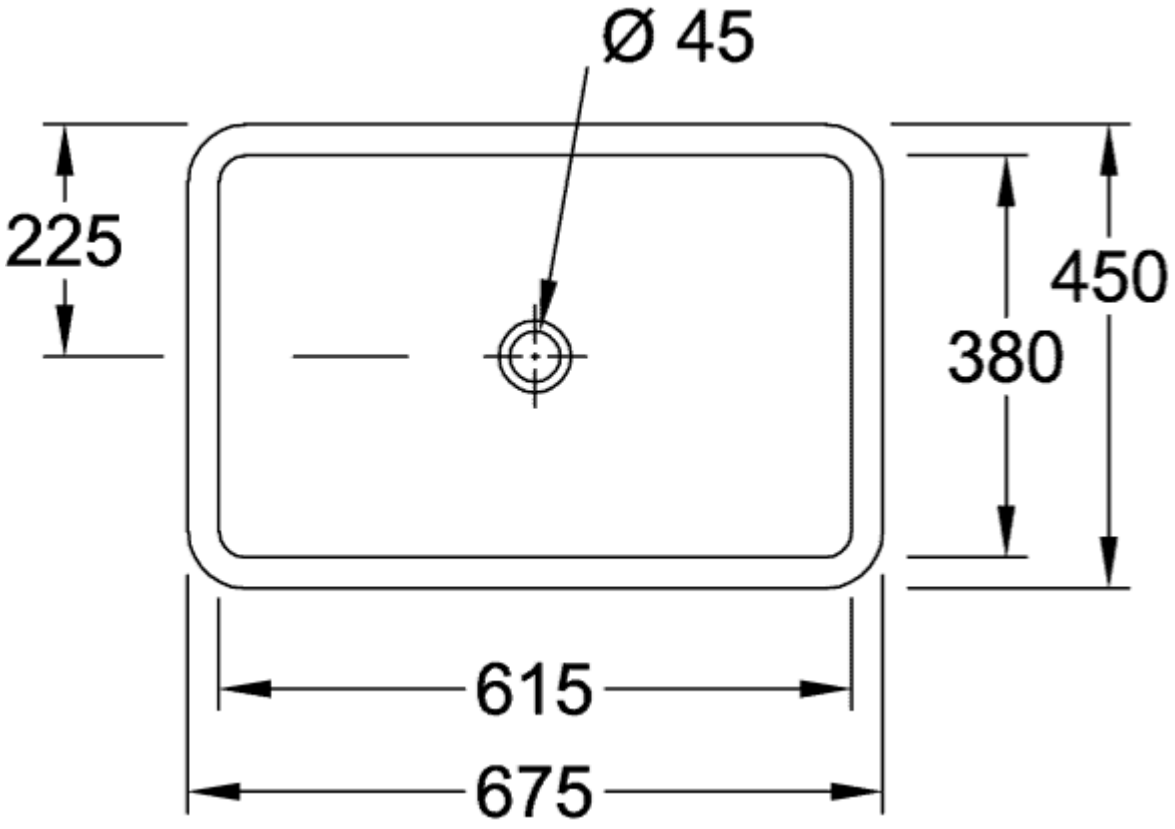
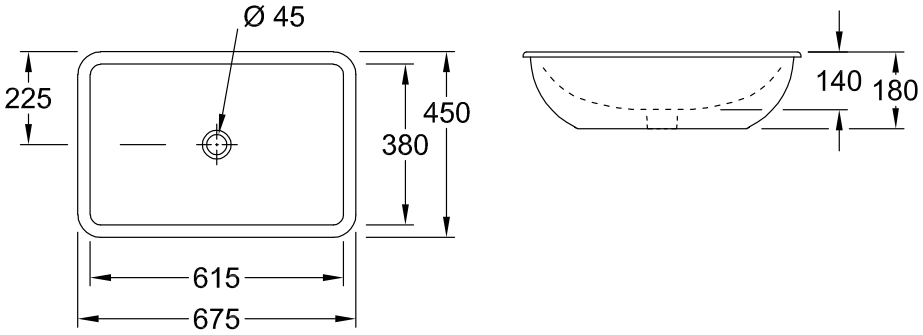
61632101