O.NOVO CISTERN

PRODUCT INFORMATION

Article title	Villeroy & Boch O.novo Cistern, water inlet from the sides, reversible, White Alpin
Article number	5760S101
Scope of delivery	1 x cistern , 1 x fastening set
Depth in mm	165
Width in mm	385
Height in mm	360
Collection	O.novo
Material	Sanitary ceramics
Colour name	White Alpin
Other material	Push button: ABS Flushing mechanism: Plastic
Other surfaces	Push button: chrome, glossy, Flushing mechanism: glossy
Colour designation	White Alpin
Other colour designations	Push button: Chrome, Flushing mechanism: White Alpin

TECHNICAL DRAWINGS

5760S101

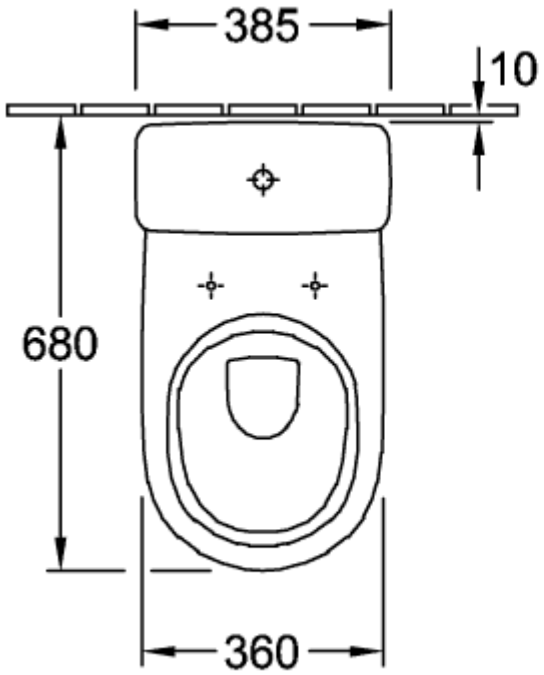

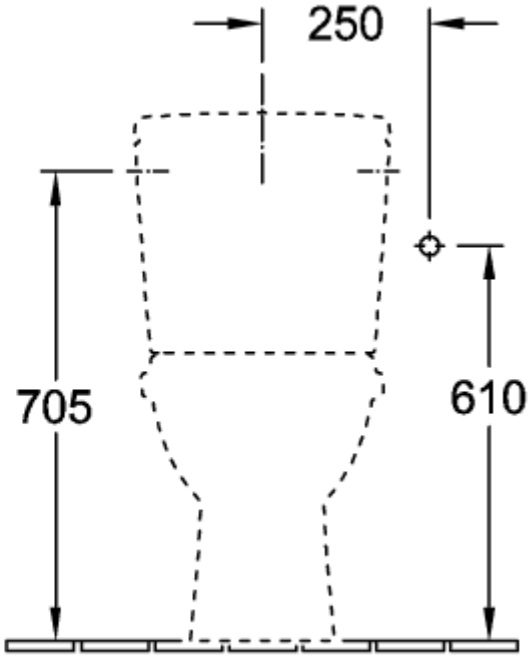

5760S101

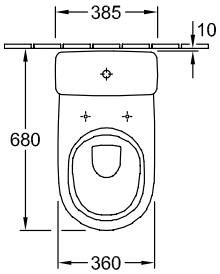

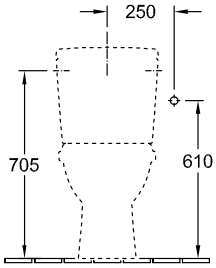

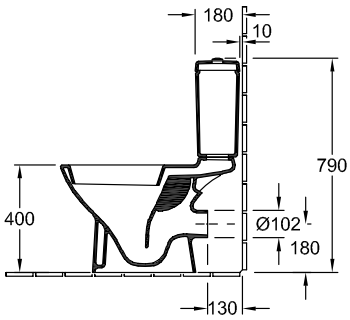

5760S101

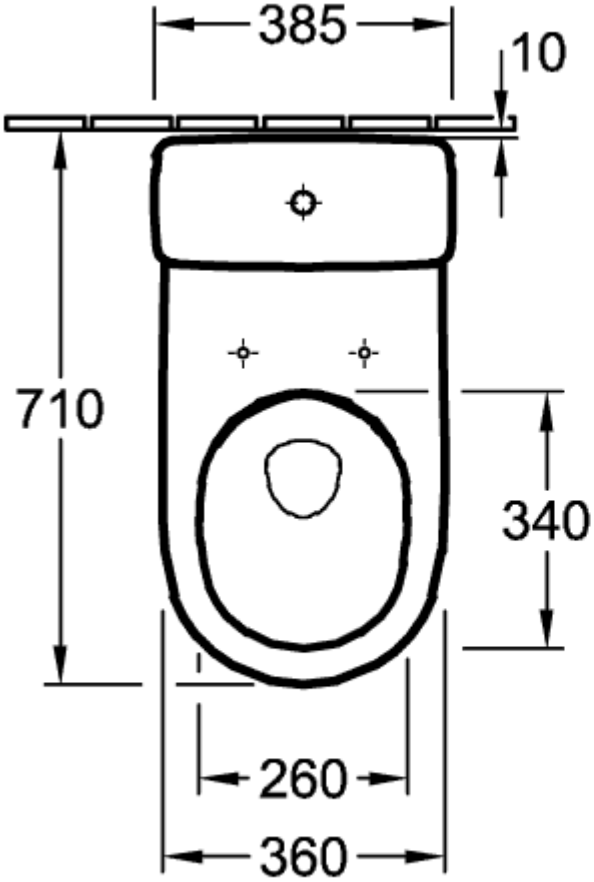
385
10
710
340
260
360

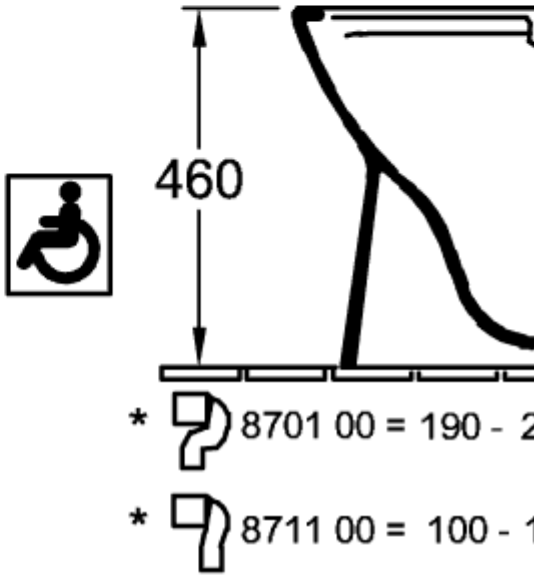
460
* 8701 00 = 190 - 2
* 8711 00 = 100 - 1

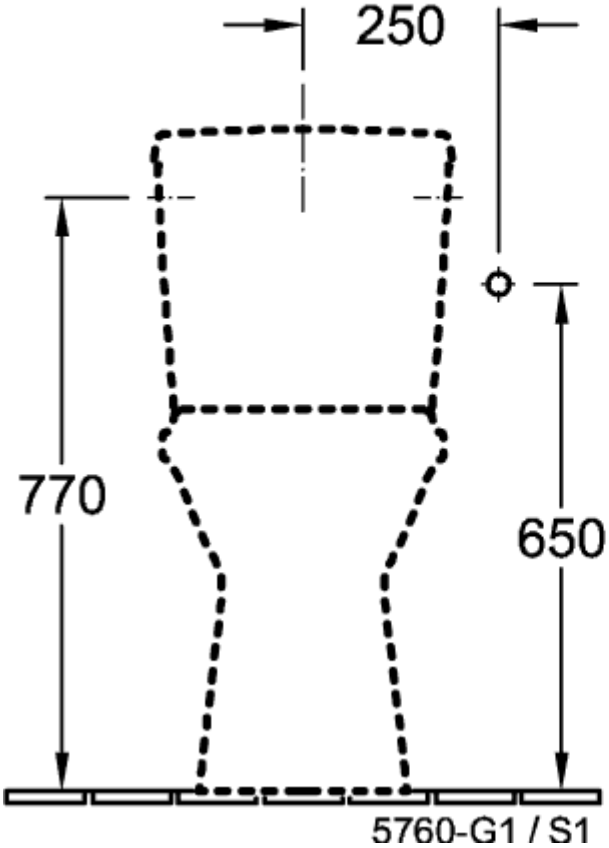
250
770
650
5760-G1 / S1

5760S101

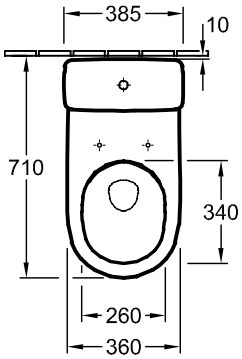
385
10
710
340
260
360

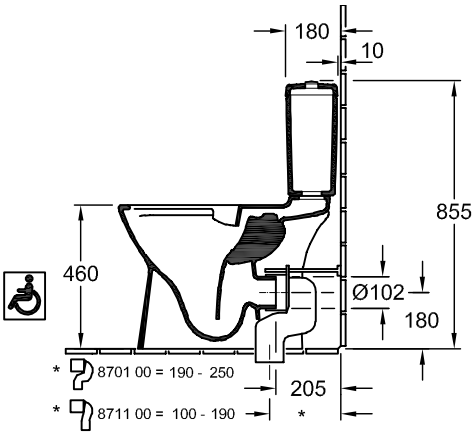
180
10
855
460
Ø102
180
205
* 8701 00 = 190 - 250
* 8711 00 = 100 - 190
*

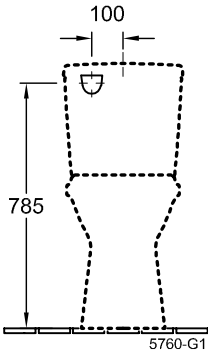
100
785
5760-G1

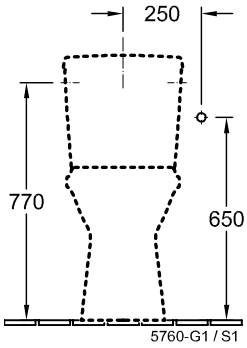
250
770
650
5760-G1 / S1

5760S101

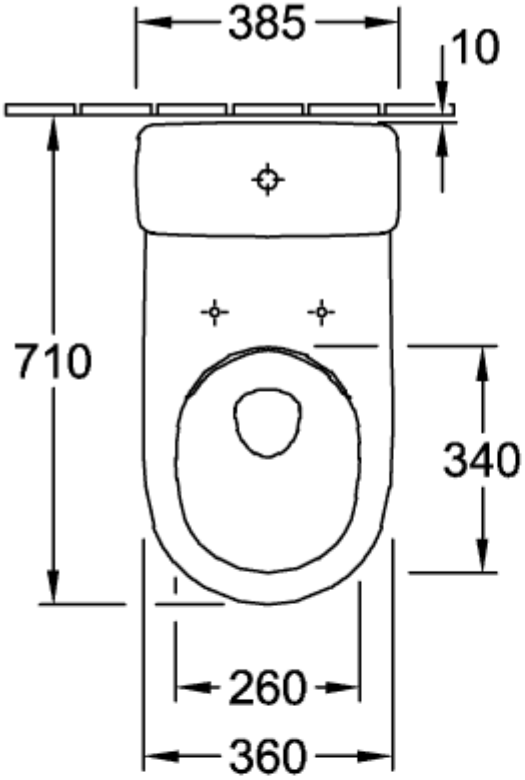
385
10
710
340
260
360

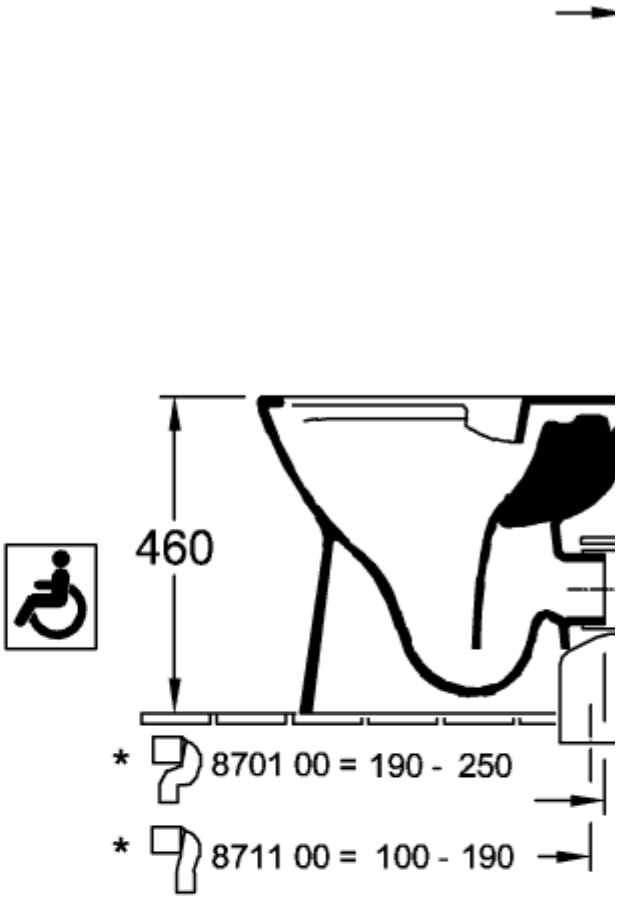
460
* 8701 00 = 190 - 250
* 8711 00 = 100 - 190

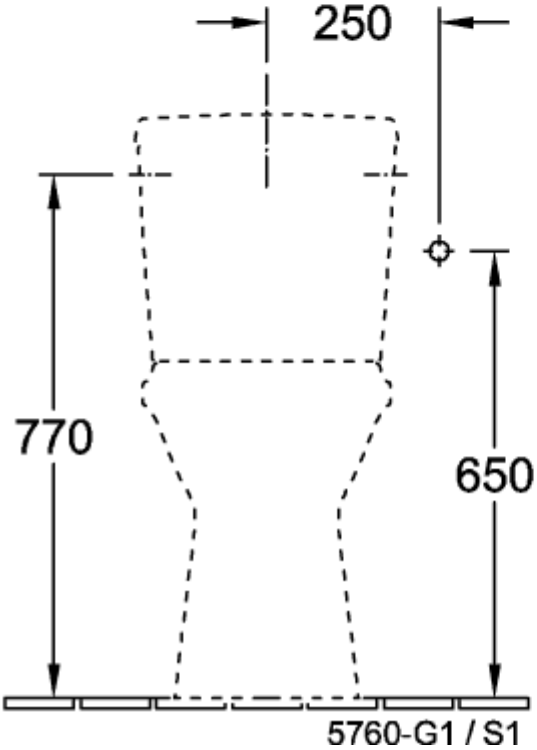
250
770
650
5760-G1 / S1

5760S101

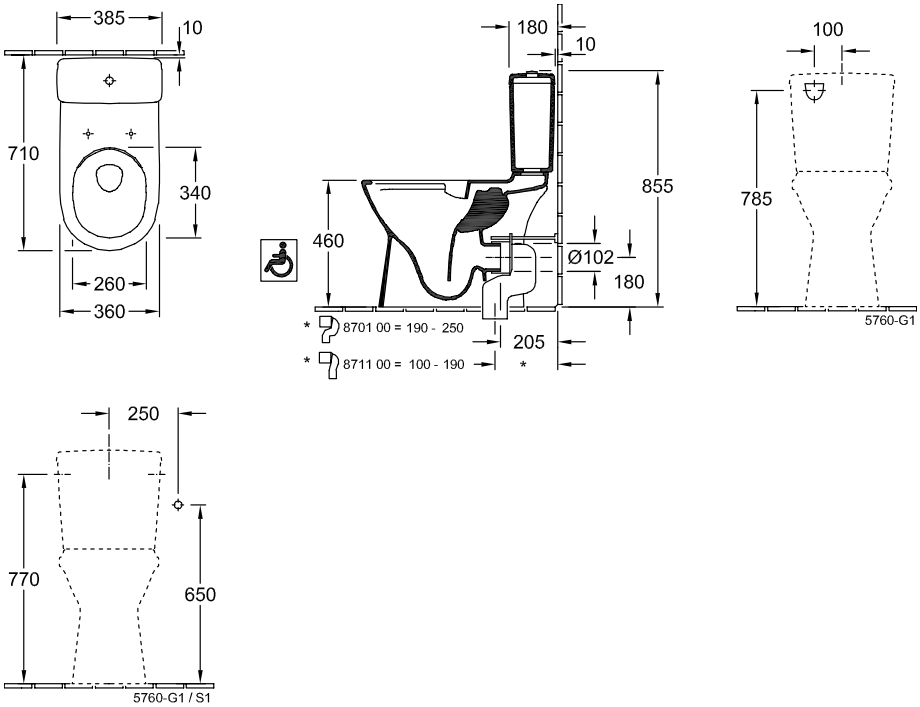
385
10
710
340
260
360
180
10
855
460
Ø102
180
205
* 8701 00 = 190 - 250
* 8711 00 = 100 - 190
*
100
785
5760-G1
250
770
650
5760-G1 / S1

5760S101

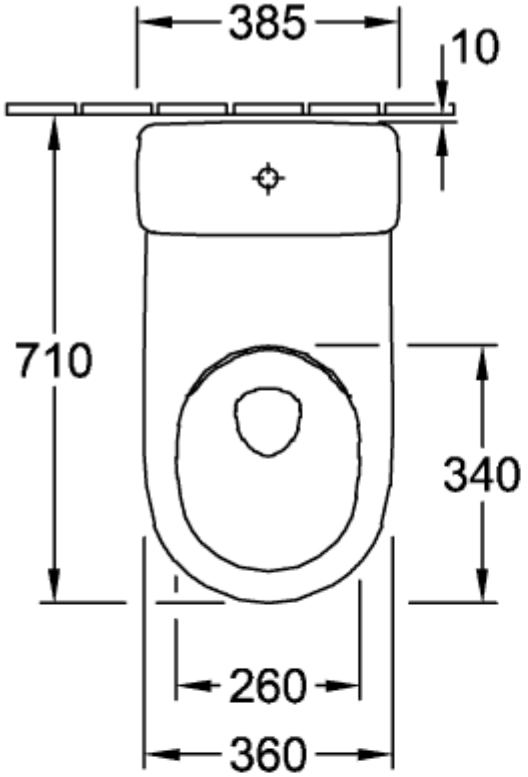
385
10
710
340
260
360

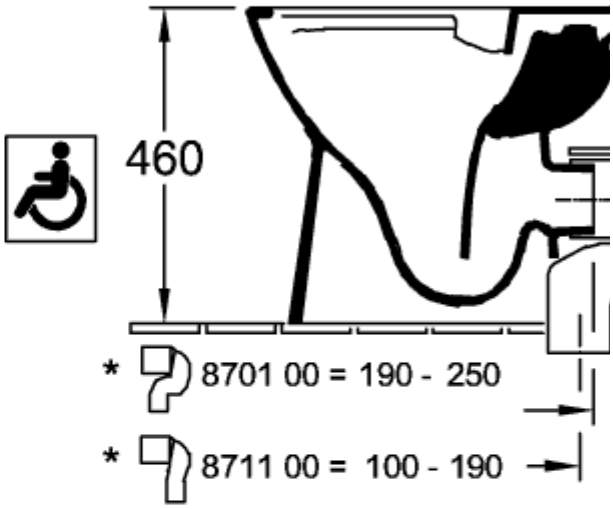
460
* 8701 00 = 190 - 250
* 8711 00 = 100 - 190

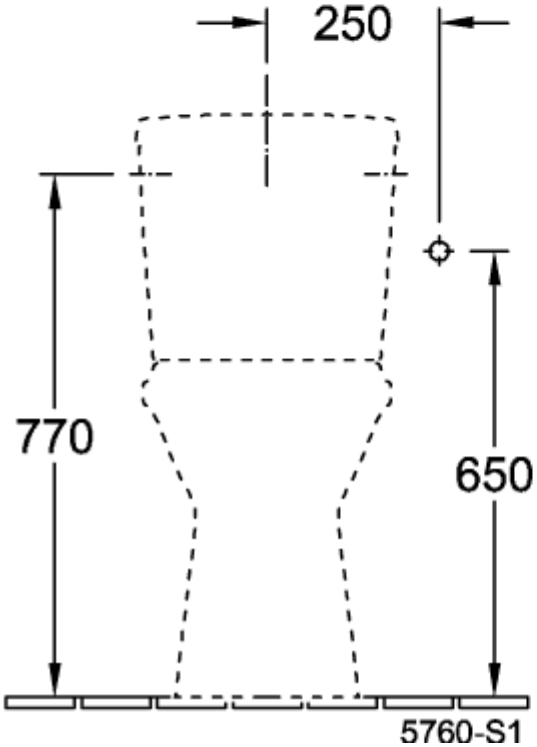
250
770
650
5760-S1

5760S101

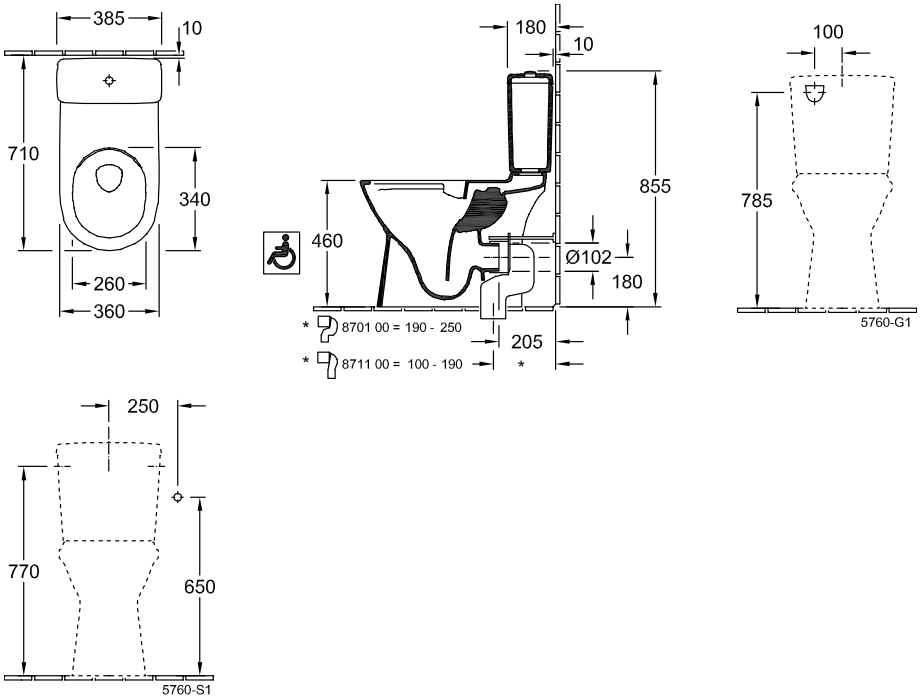

5760S101

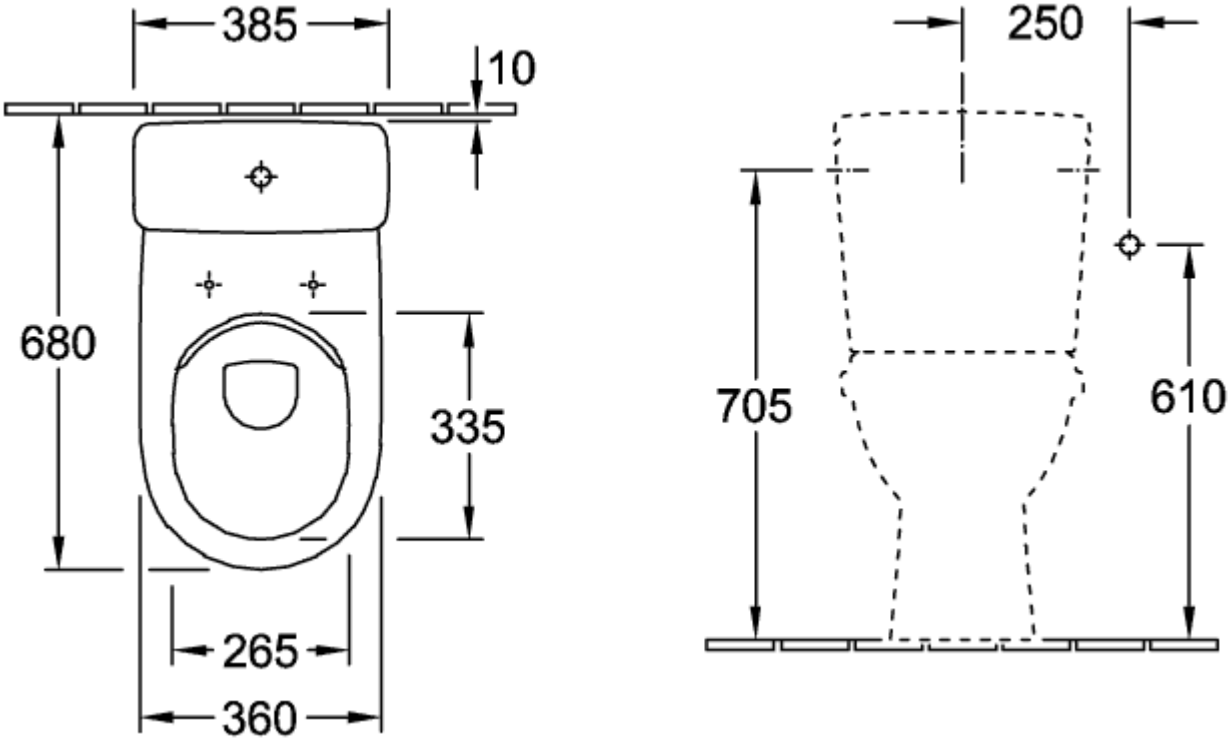

5760S101

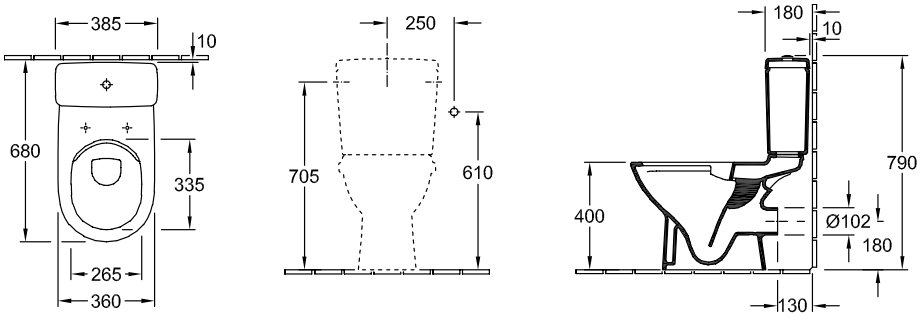

5760S101

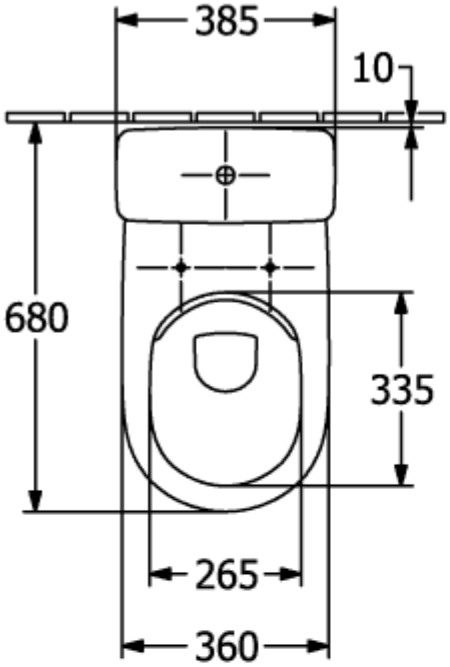

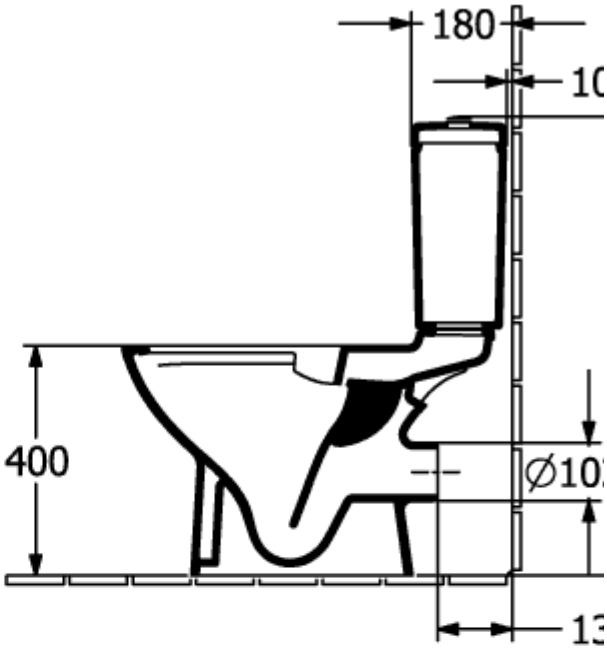

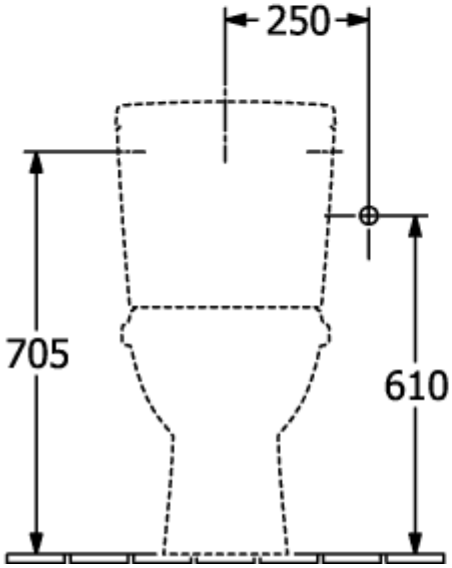

5760S101

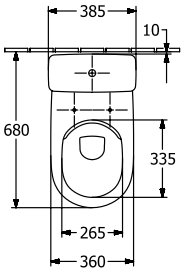

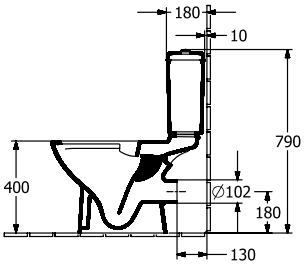

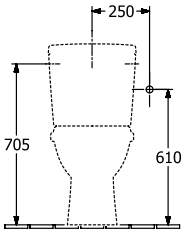

5760S101

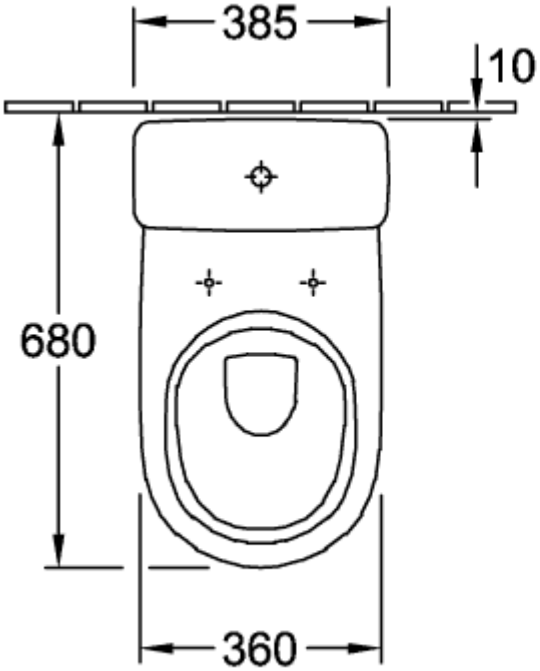

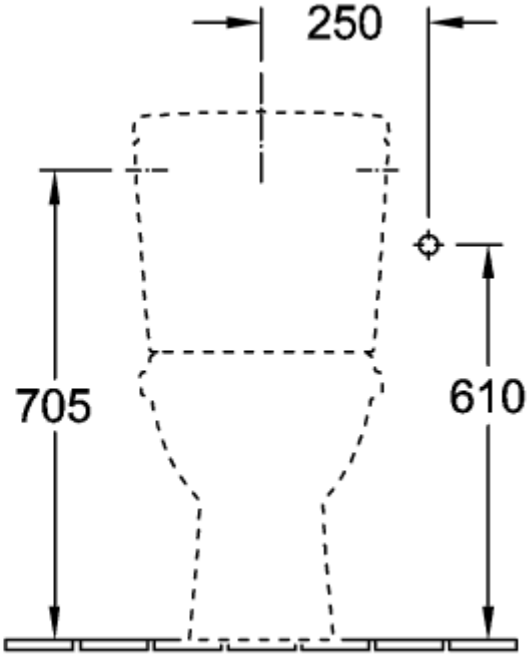

5760S101

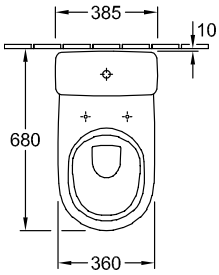

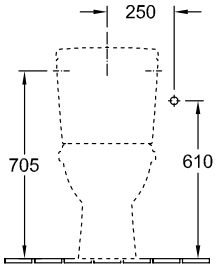

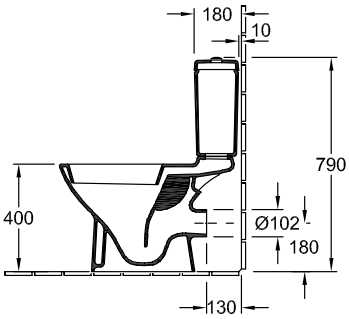

5760S101

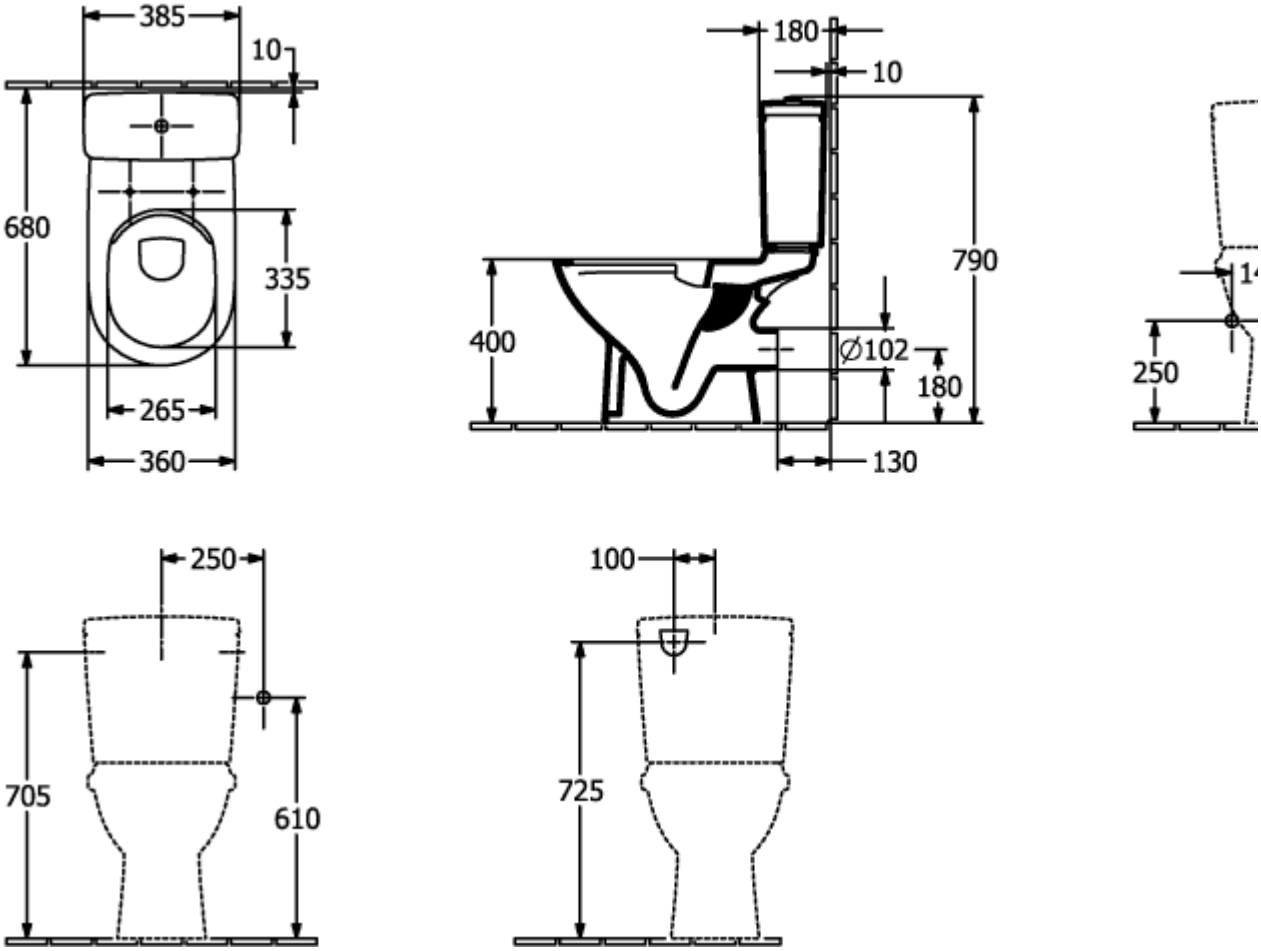
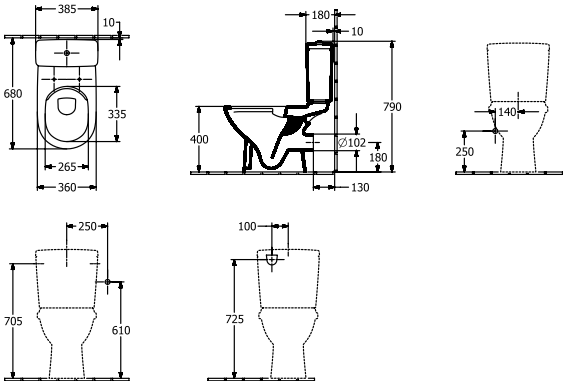
5760S101