ARCHITECTURA SIPHONIC URINAL OVAL

PRODUCT INFORMATION

Article title	Villeroy & Boch Architectura Siphonic urinal, with target, concealed water inlet, 355 x 385 mm, White Alpin
Article number	55740501
Assembly / Assembly type	wall-mounted
Scope of delivery	1 x siphonic urinal , 1 x fastening set
Depth in mm	385
Width in mm	355
Height in mm	620
Collection	Architectura
Suitable for	Installation without lid
Flush volume l	1,0 / l
Material	Sanitary ceramics
surface	glossy
Colour name	White Alpin
Shape	Oval
Colour designation	White Alpin
Easy surface cleaning (CeramicPlus)	No
Rimless (mit DirectFlush)	No
Flush type	Siphonic urinal
Outlet / outlet	Outlet may be concealed depending on the type of extractor section
Target	with target

TECHNICAL DRAWINGS

55740501

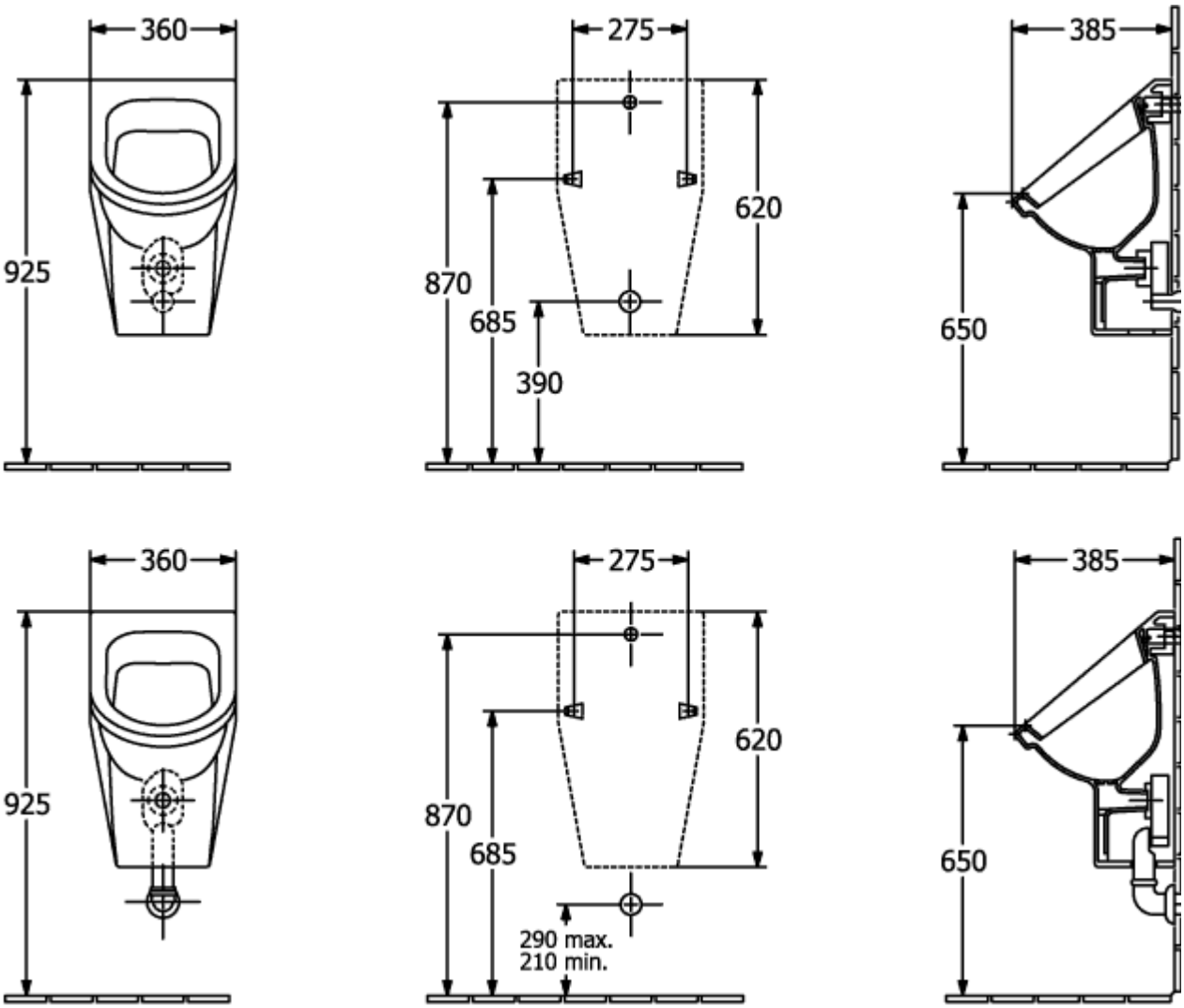

55740501

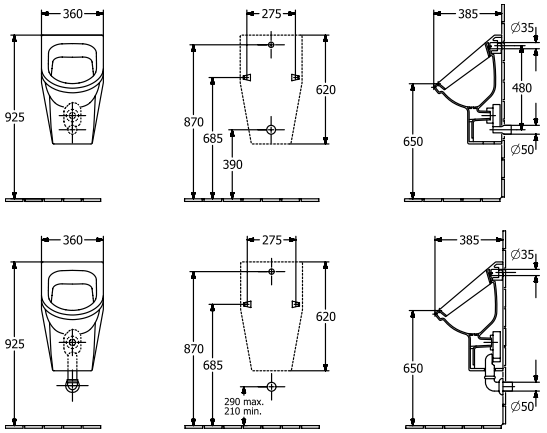
360
925
275
870
685
390
620
385
∅35
480
650
∅50
360
925
275
870
685
290 max.
210 min.
620
385
∅35
650
∅50