SUBWAY 2.0 BIDET COMPACT OVAL

PRODUCT INFORMATION

Article title	Villeroy & Boch Subway 2.0 Bidet compact, wall-mounted, 355 x 480 mm, White Alpin
Article number	54060001
Assembly / Assembly type	wall-mounted
Scope of delivery	1 x bidet , 1 x fastening set
Depth in mm	480
Width in mm	355
Height in mm	280
Collection	Subway 2.0
Suitable for	1-hole mixer
Wall-mounted - floor-standing	wall-mounted
Material	Sanitary ceramics
surface	glossy
Colour name	White Alpin
Shape	Oval
Colour designation	White Alpin
Antibacterial surface (with AntiBac)	No
Easy surface cleaning (CeramicPlus)	No

TECHNICAL DRAWINGS

54060001

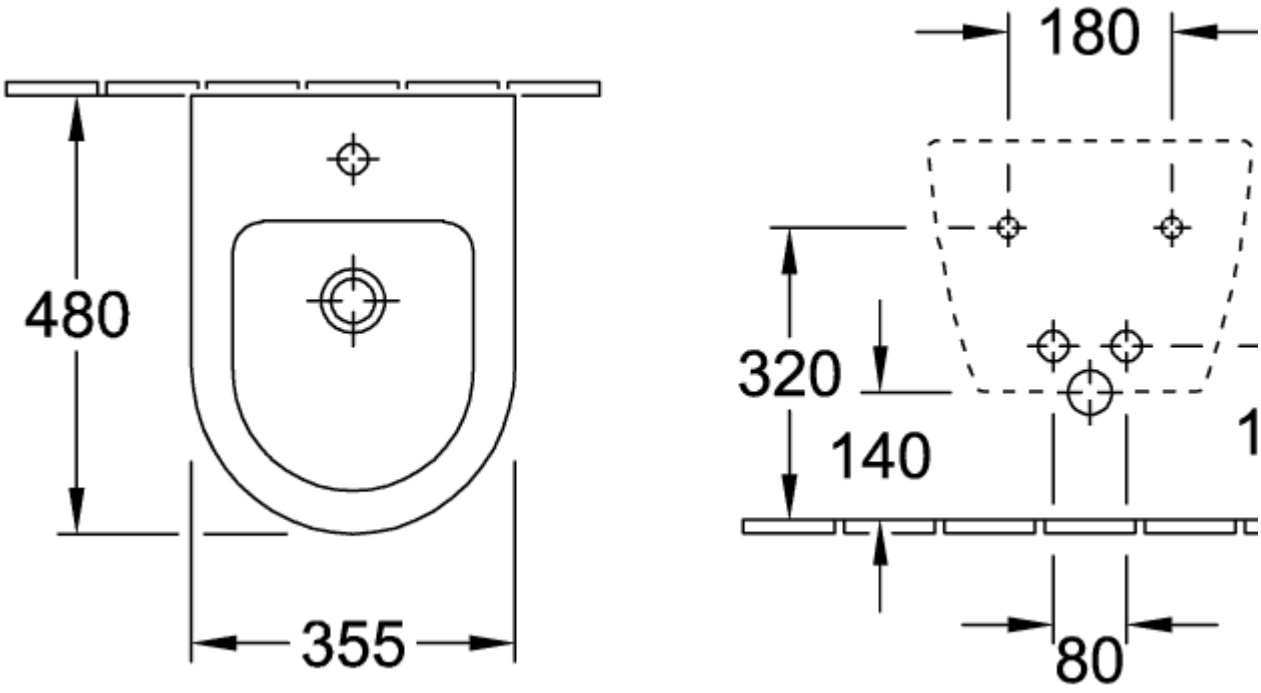
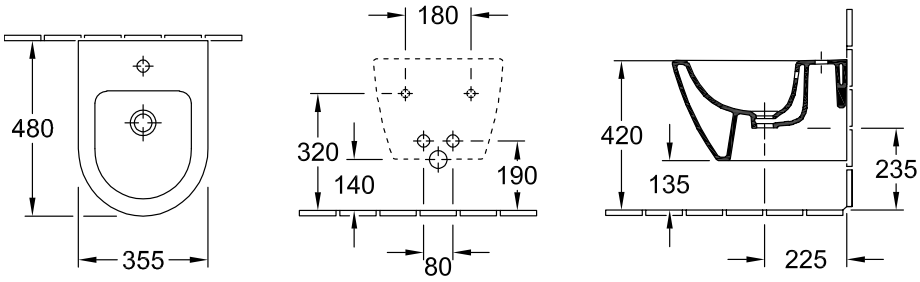
54060001