O.NOVO PEDESTAL

PRODUCT INFORMATION

Article title	Villeroy & Boch O.novo Pedestal, 165 x 140 x 690 mm, White Alpin
Article number	52650001
Scope of delivery	1 x pedestal
Depth in mm	140
Width in mm	165
Height in mm	690
Collection	O.novo
Material	Sanitary ceramics
Colour name	White Alpin
Colour designation	White Alpin

TECHNICAL DRAWINGS

52650001

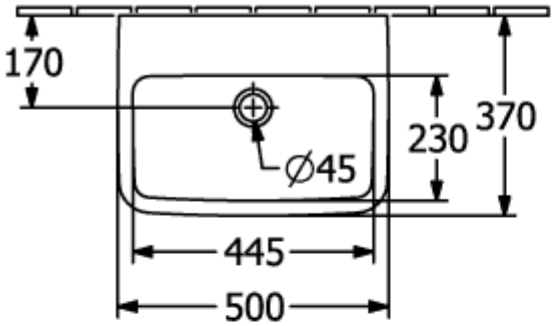

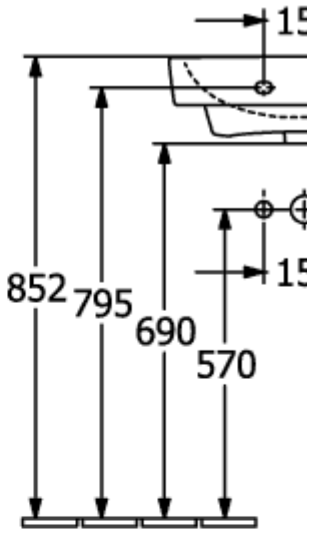

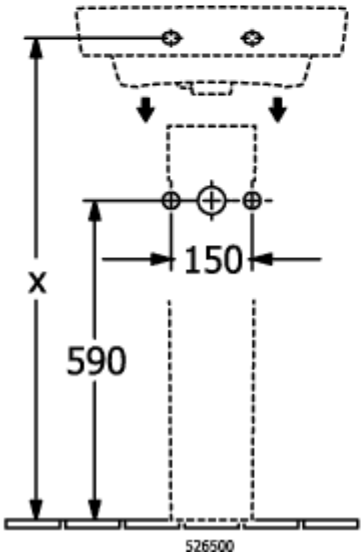

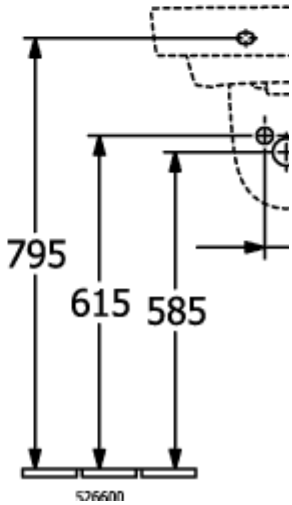

52650001

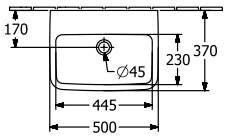

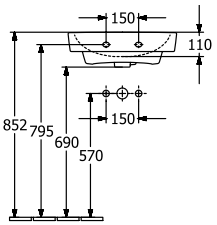

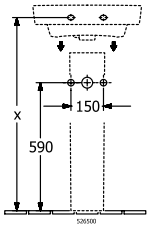

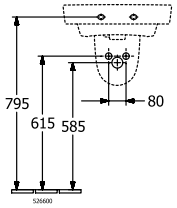

52650001

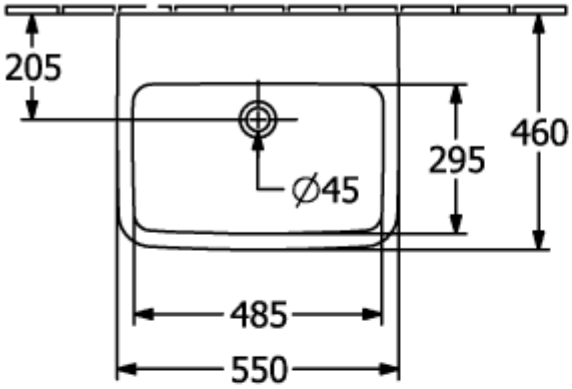

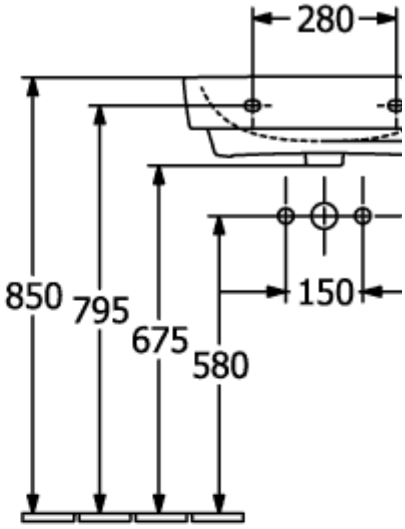

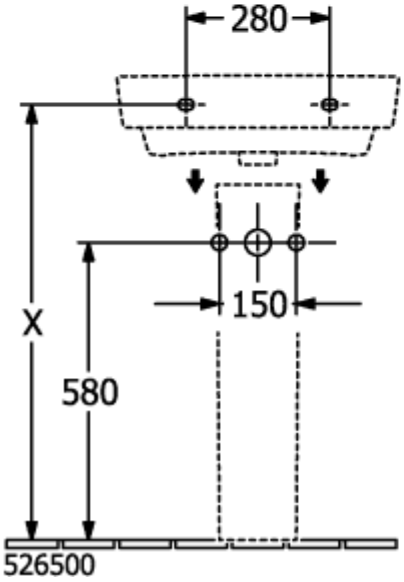

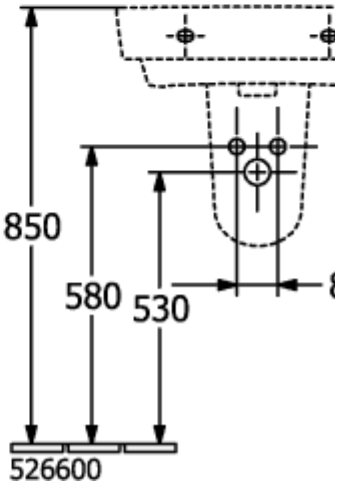

52650001

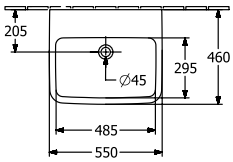

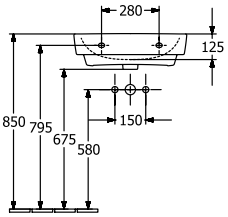

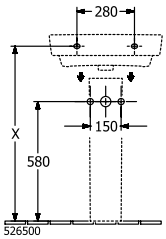

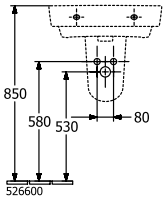

52650001

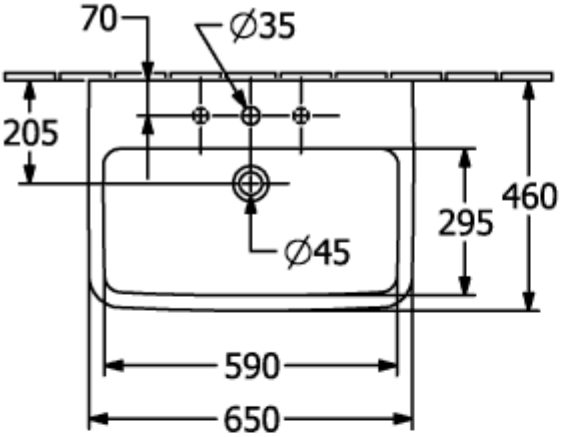

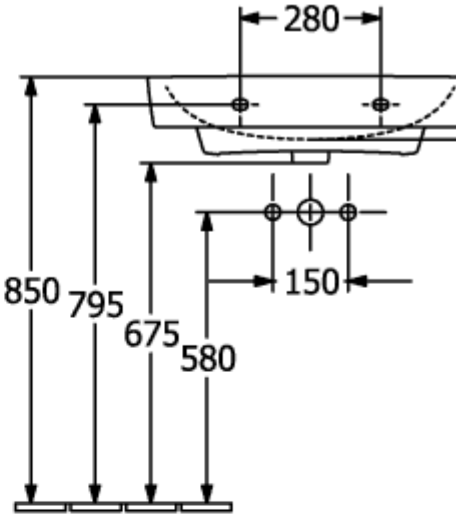

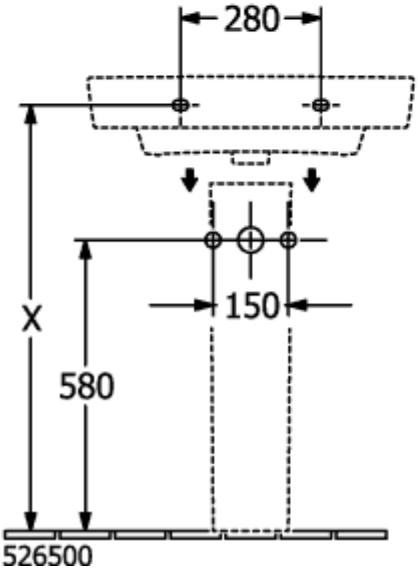

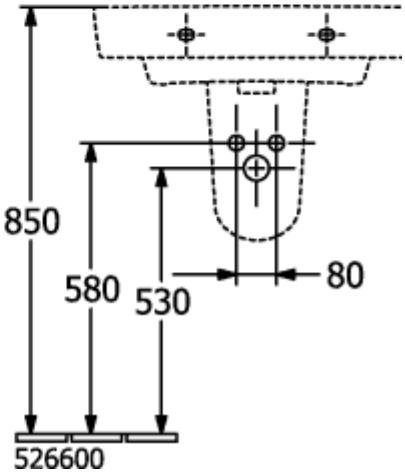

52650001

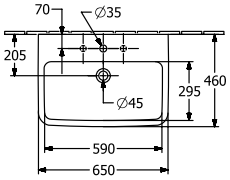
70
∅35
205
460
295
∅45
590
650

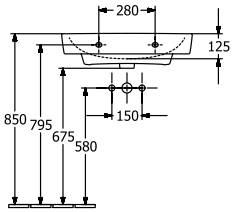
280
125
850
795
675
580
150

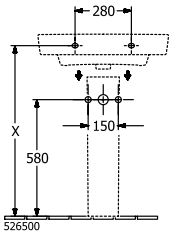
280
X
150
580
526500

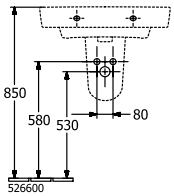
850
580
530
80
526600

52650001

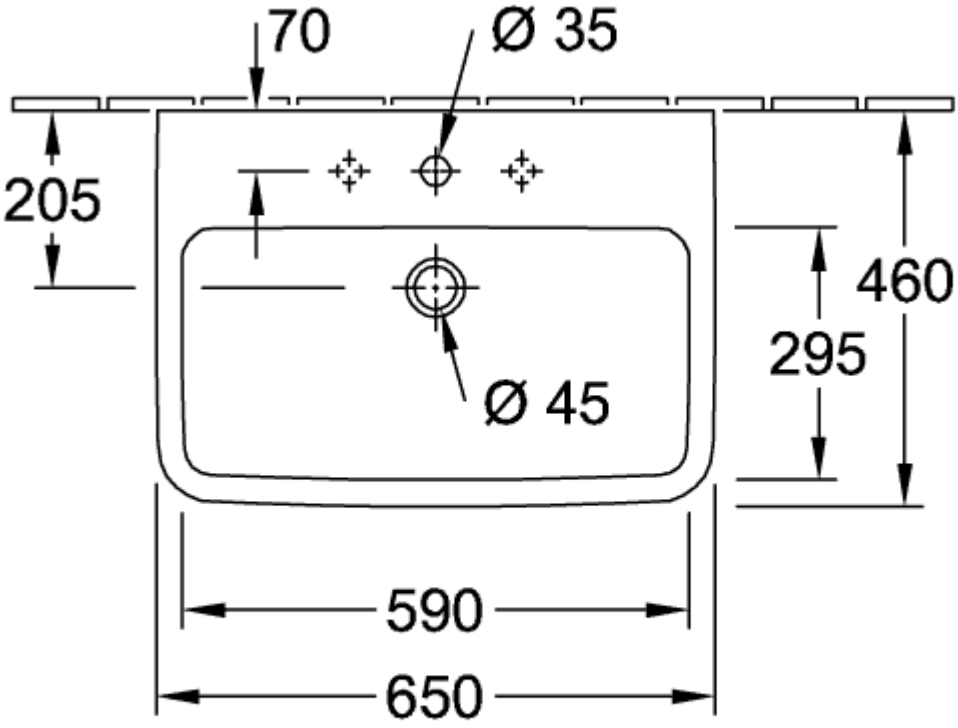
70
Ø 35
205
460
295
Ø 45
590
650

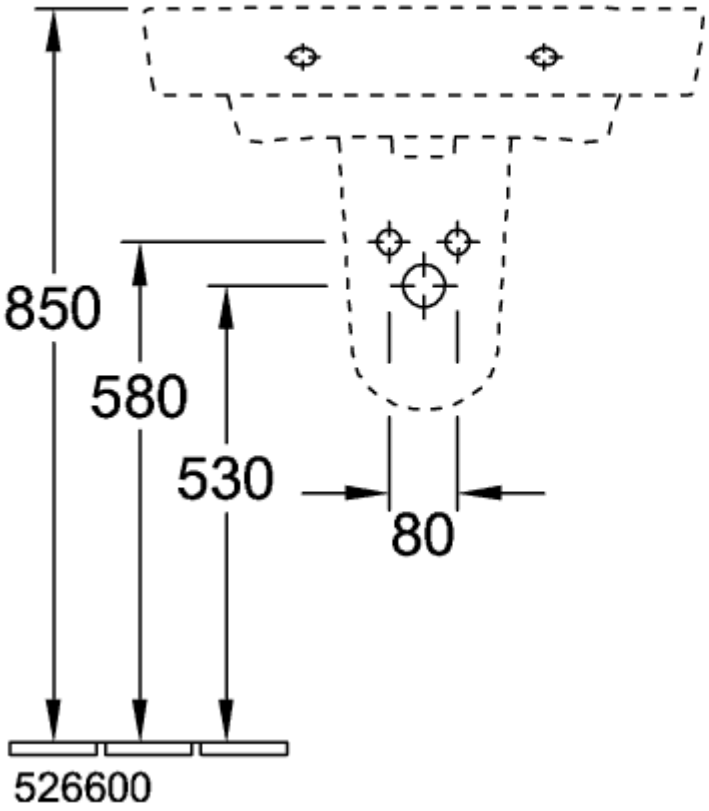
850
580
530
80
526600

52650001

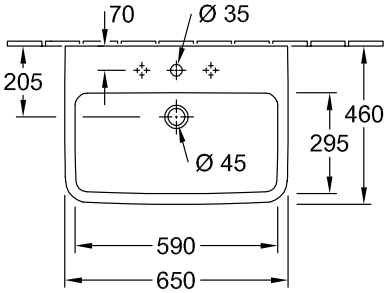
70
Ø 35
205
460
295
Ø 45
590
650

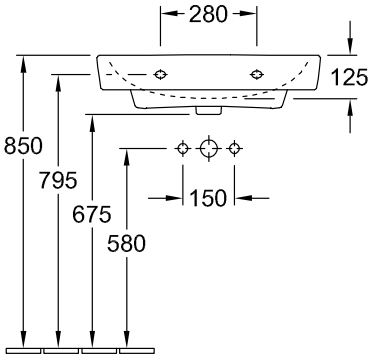
280
125
850
795
675
580
150

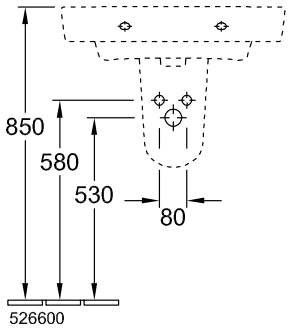
850
580
530
80
526600

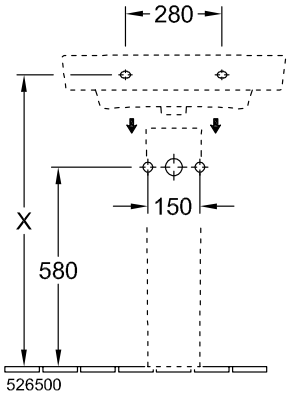
280
150
X
580
526500

52650001

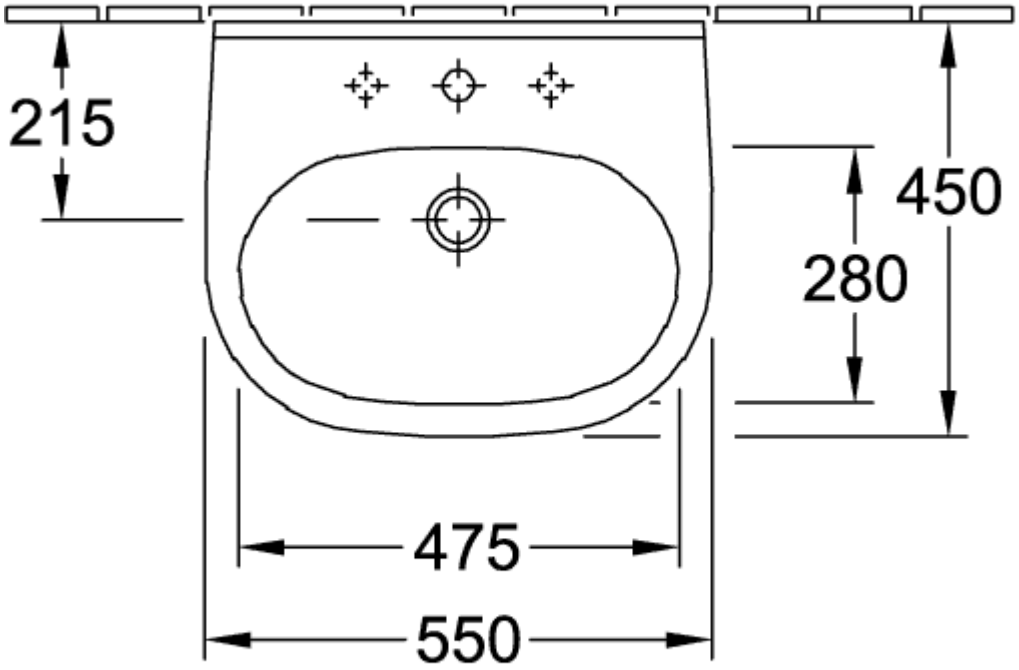

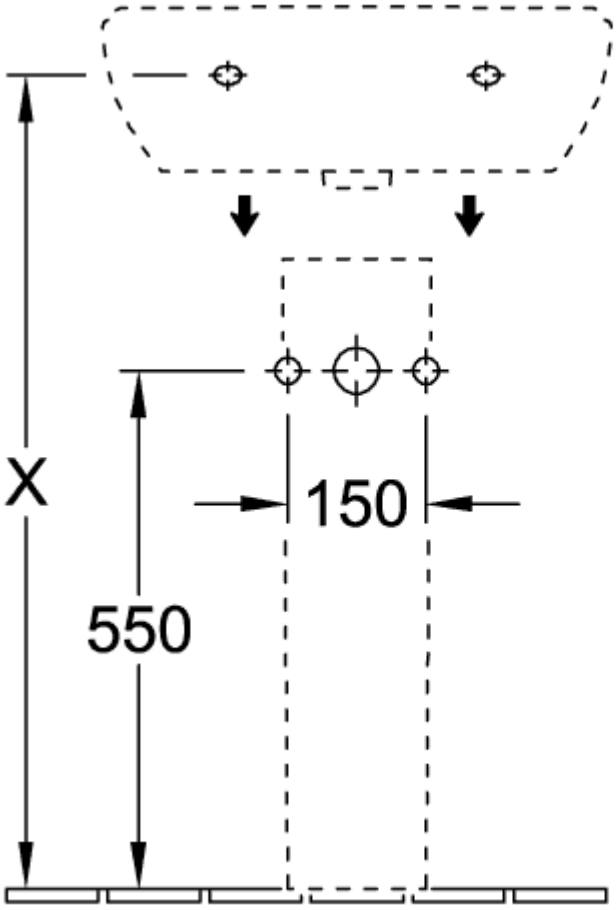

5265 00

52650001

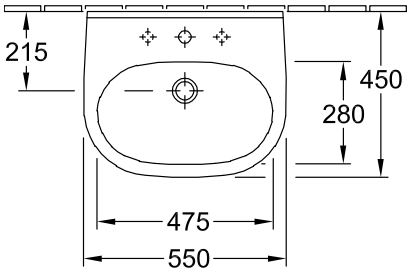

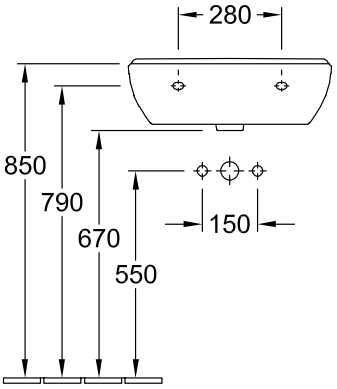

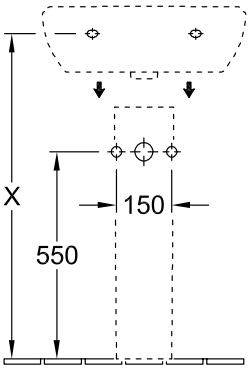

5265 00

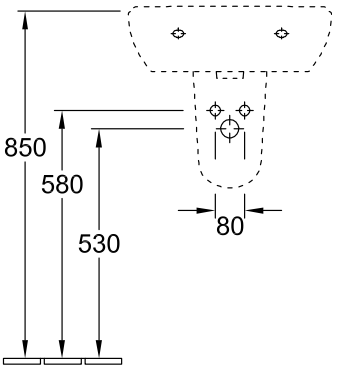

5266 00

52650001

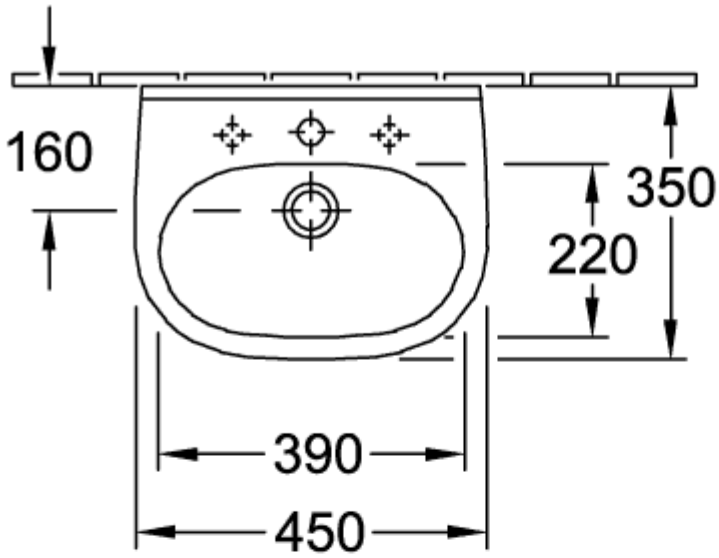

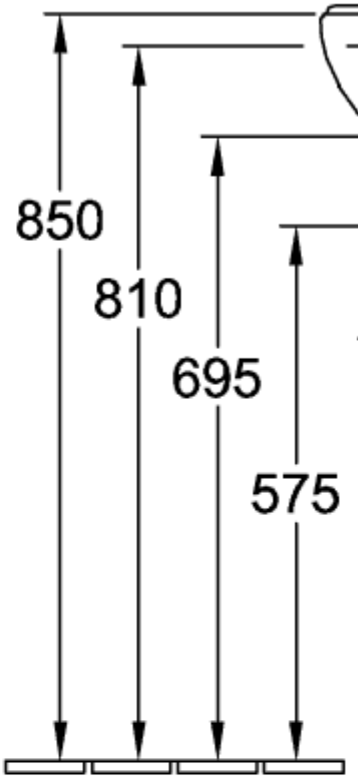

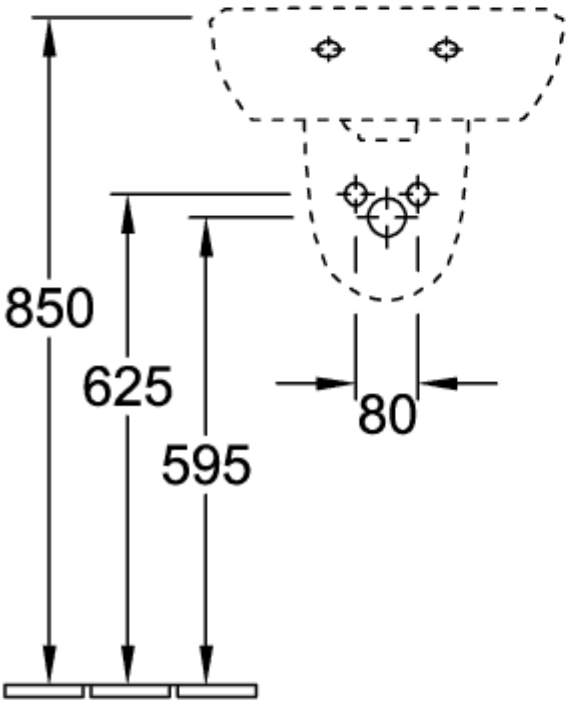

52650001

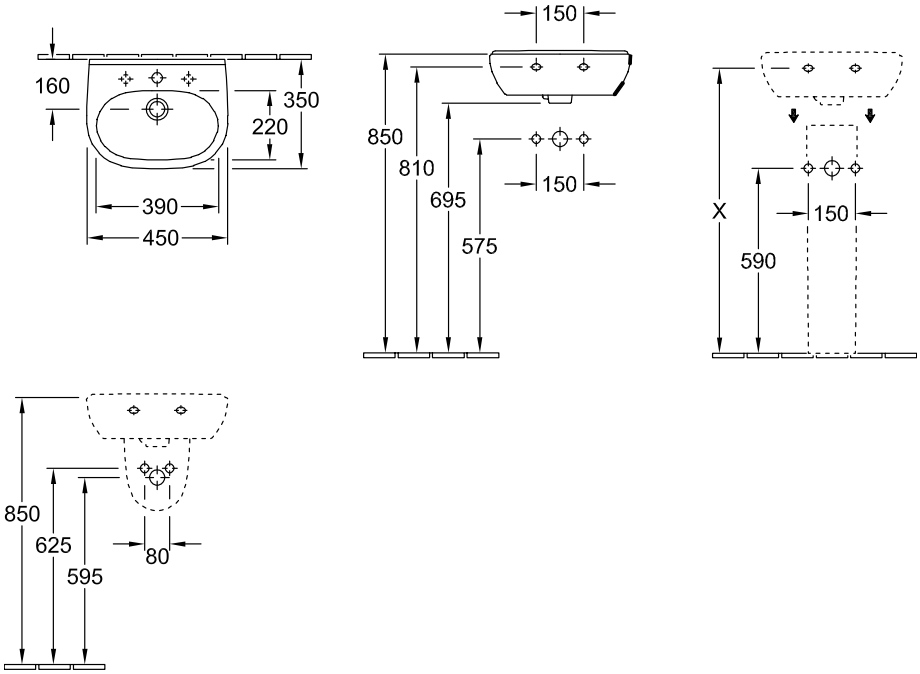
160
350
220
390
450
150
850
810
695
575
150
X
150
590
850
625
595
80

52650001

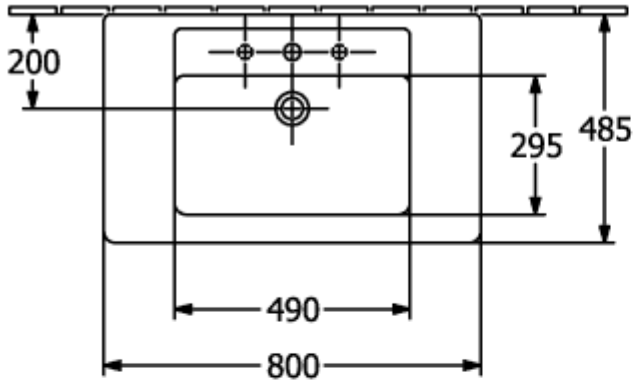

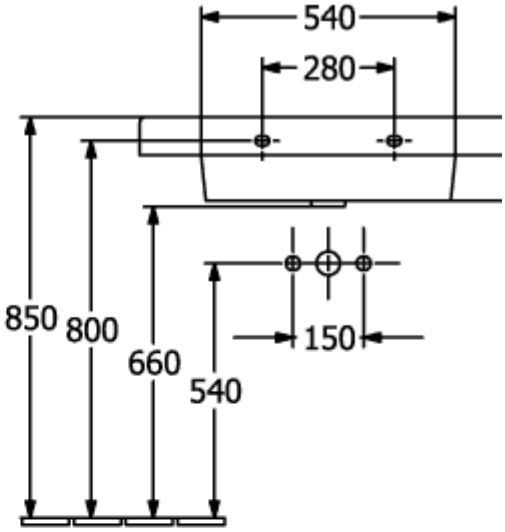

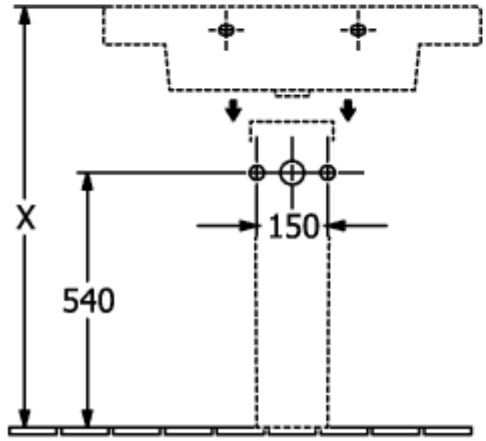

526500

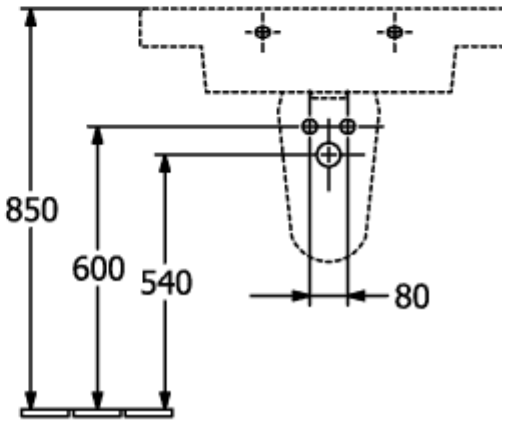

726400

52650001

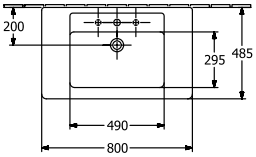

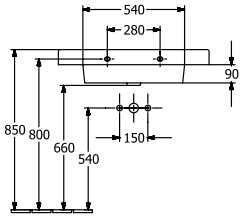

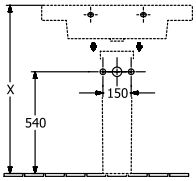

526500

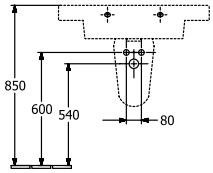

726400

52650001

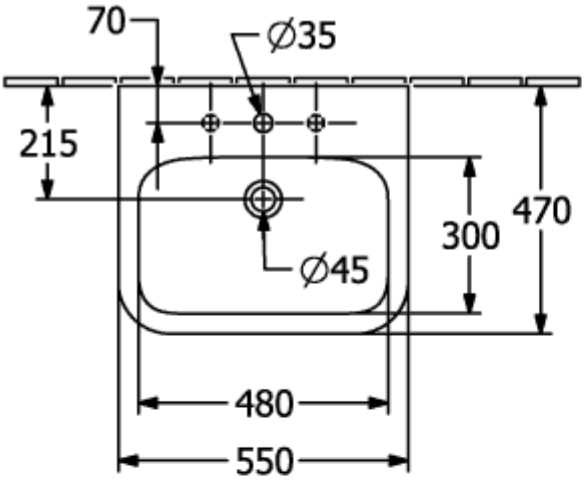

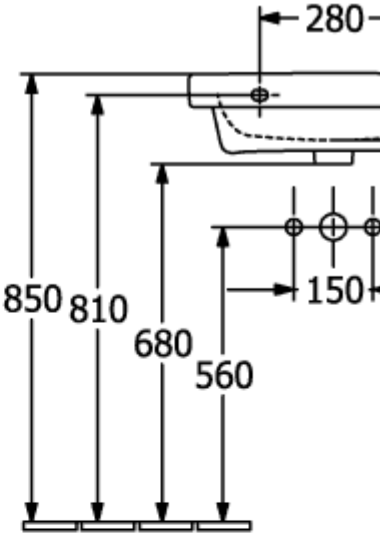

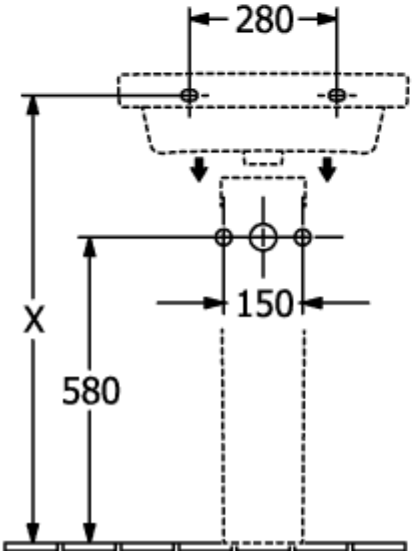

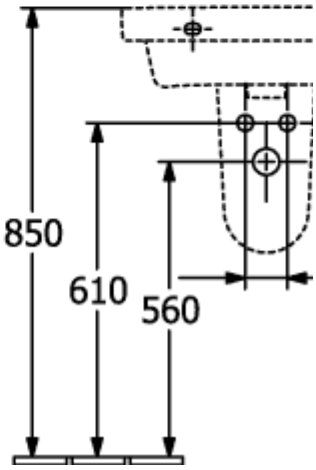

52650001

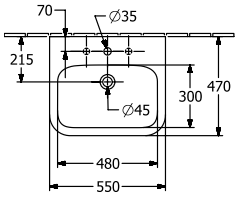

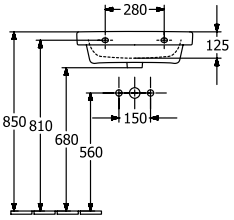

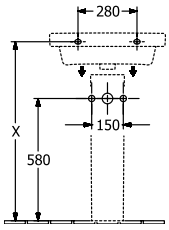

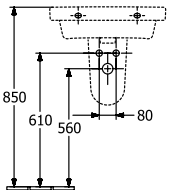

52650001

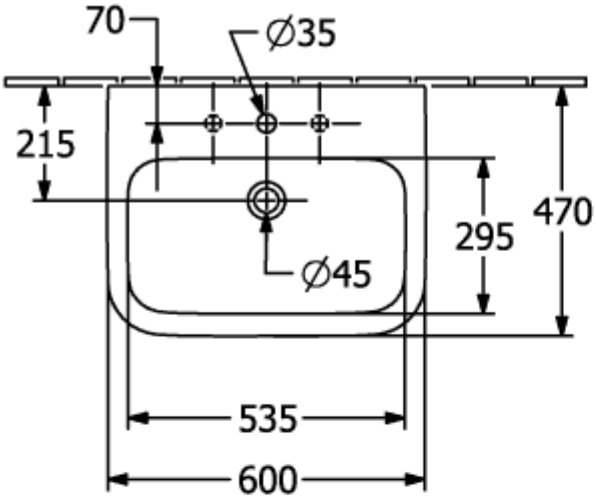

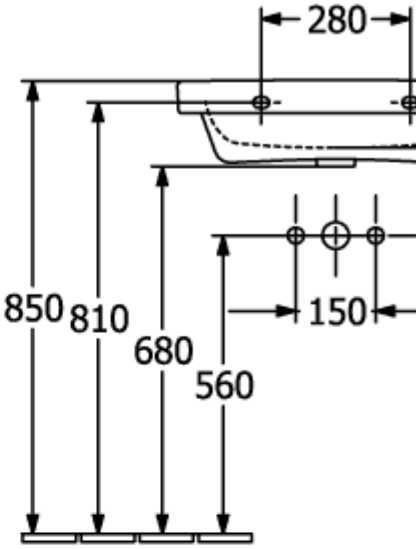

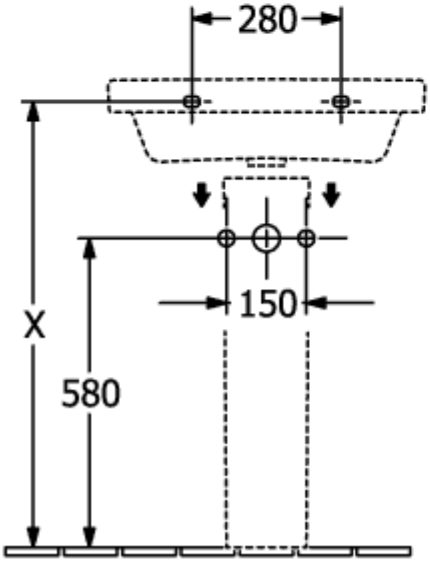

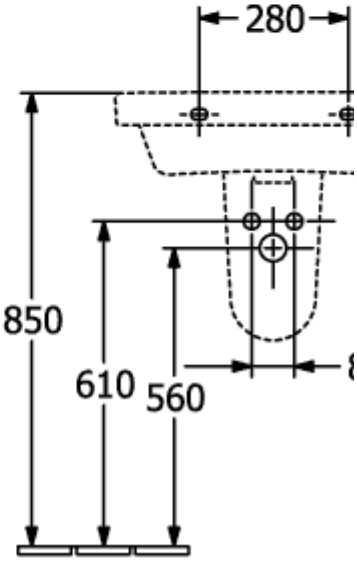

52650001

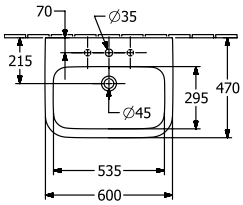

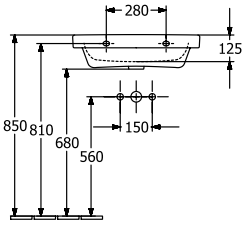

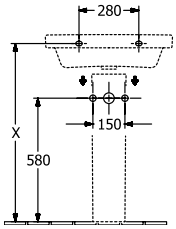

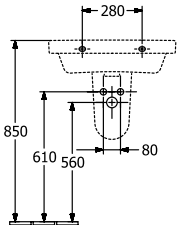

52650001

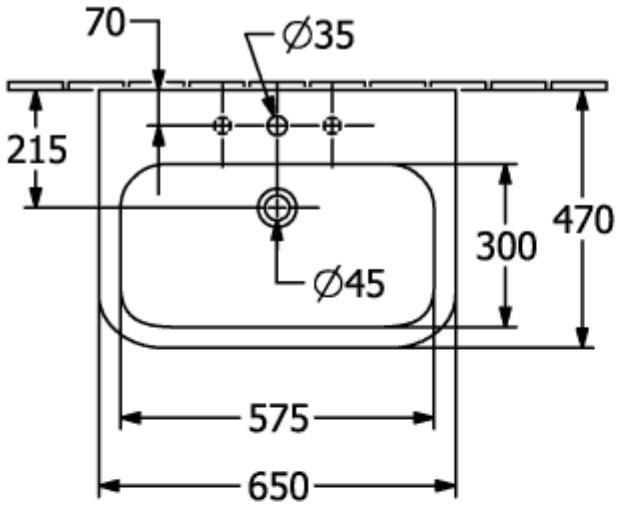

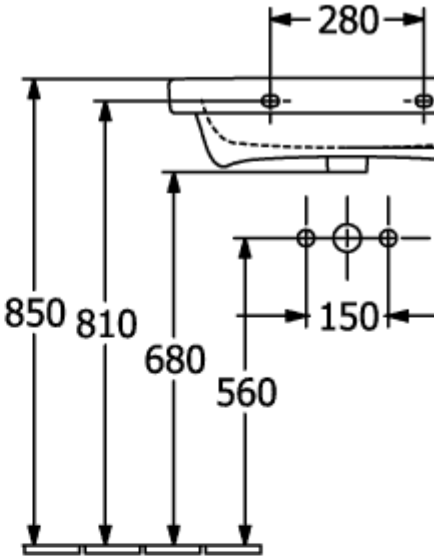

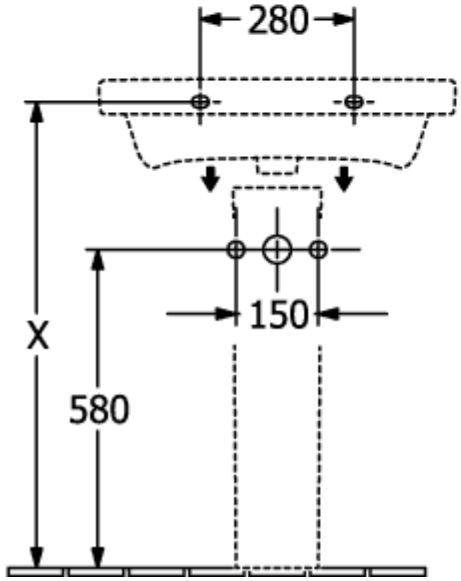

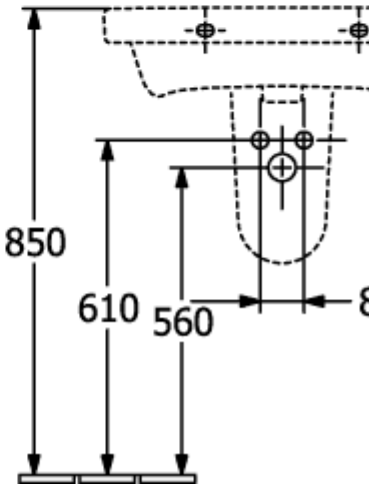

52650001

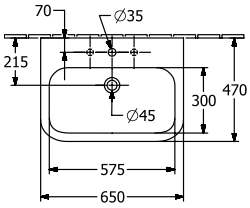

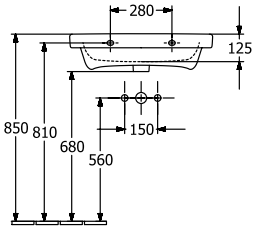

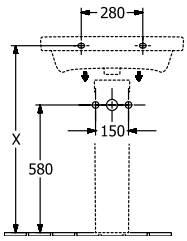

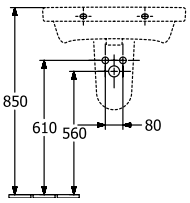

52650001

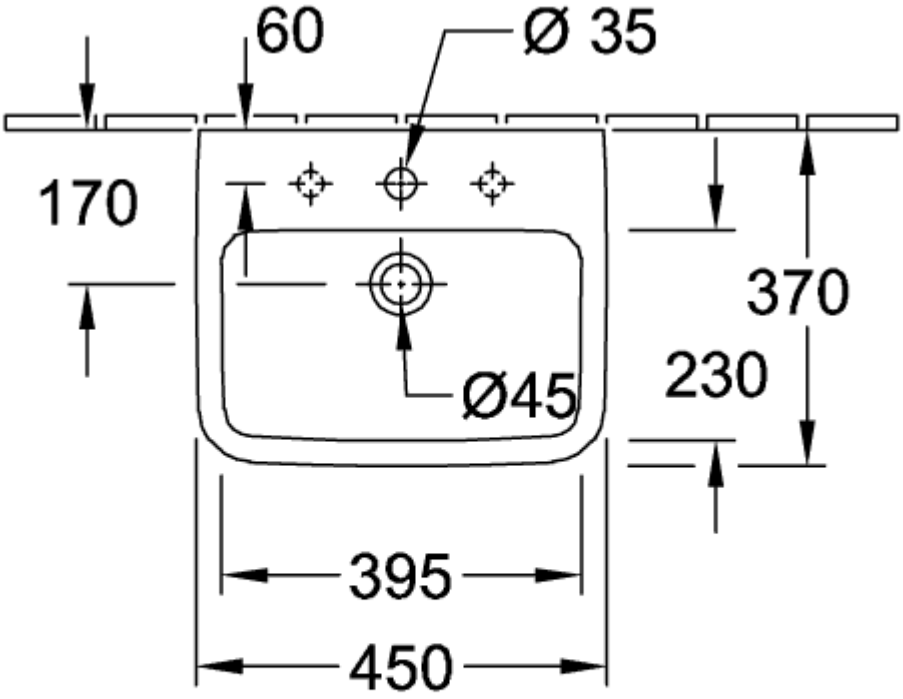
60
Ø 35
170
370
230
Ø45
395
450

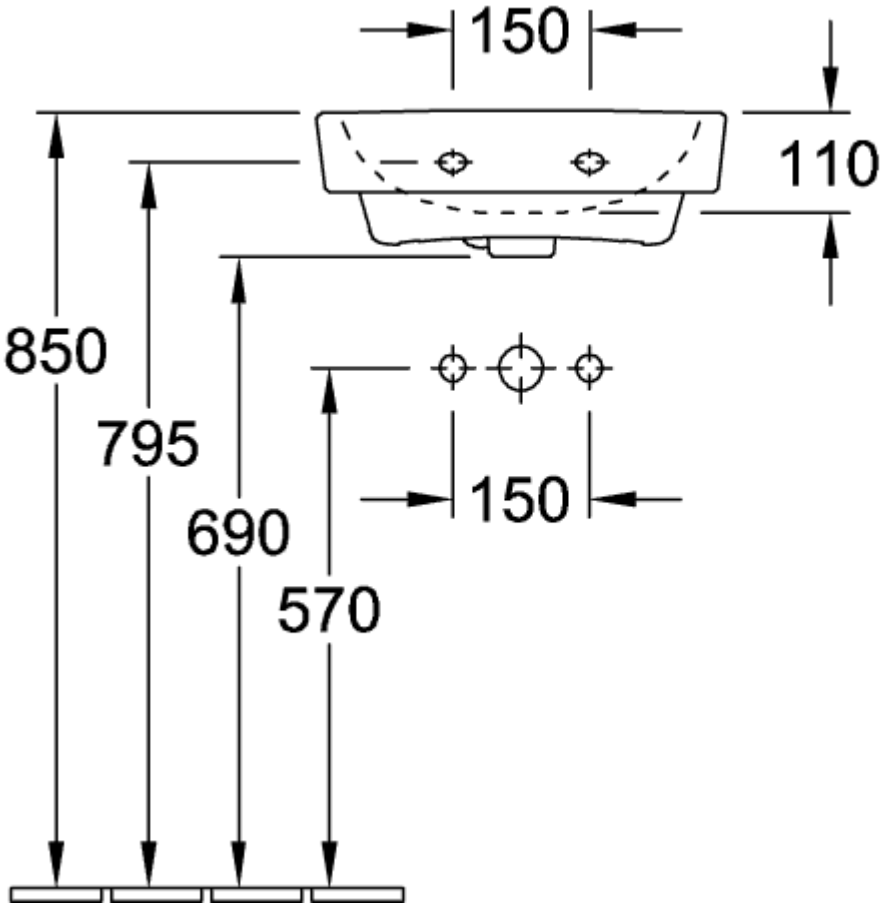
150
110
850
795
690
570
150

52650001

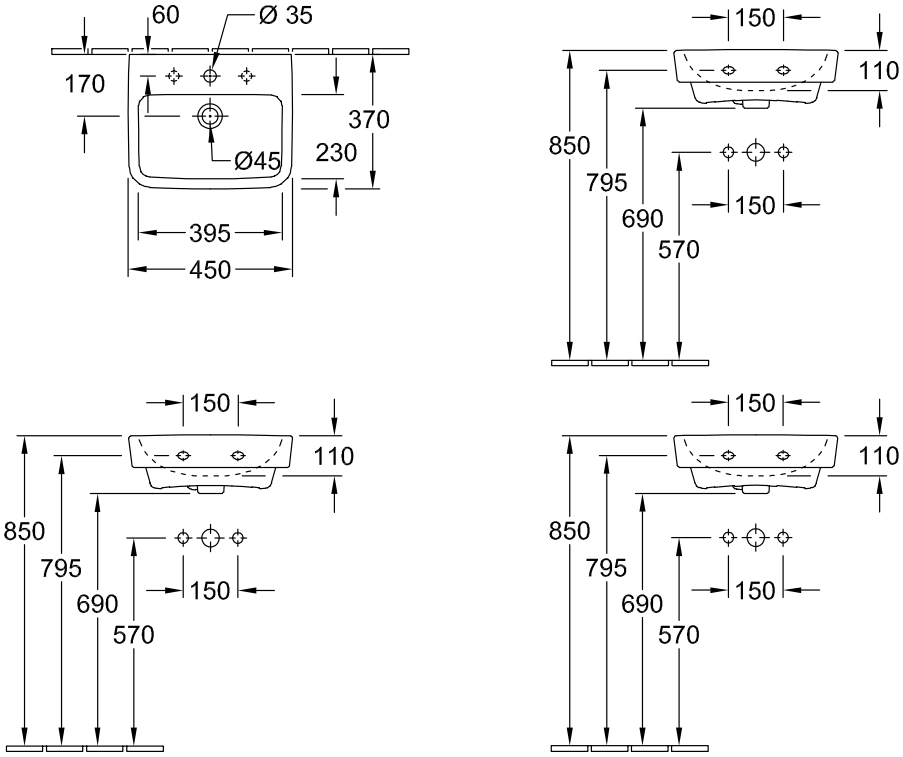
60
Ø 35
170
370
230
Ø45
395
450
150
110
850
795
690
570
150
150
110
850
795
690
570
150
150
110
850
795
690
570
150

52650001

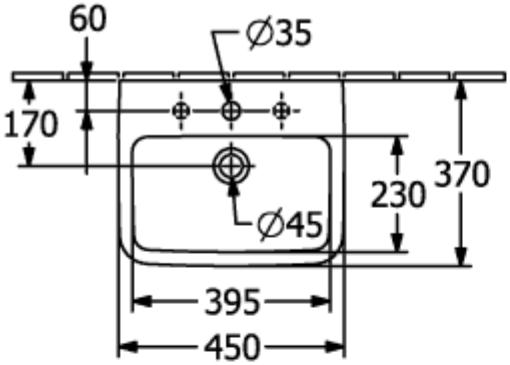

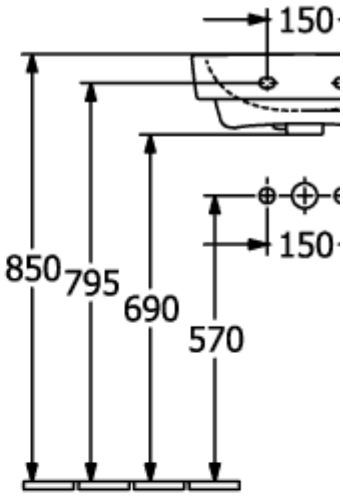

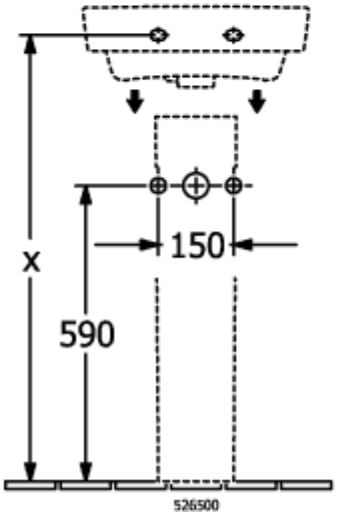

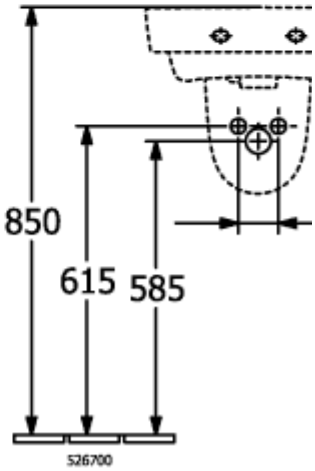

52650001

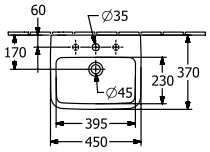

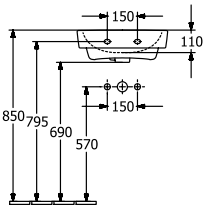

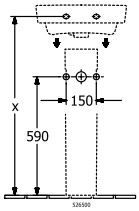

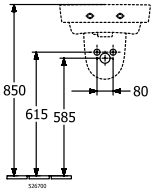

52650001

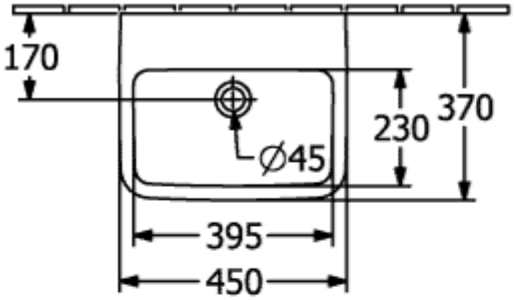

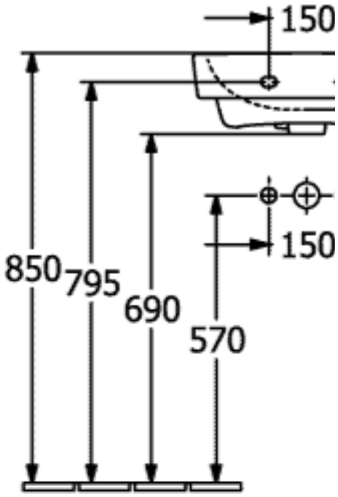

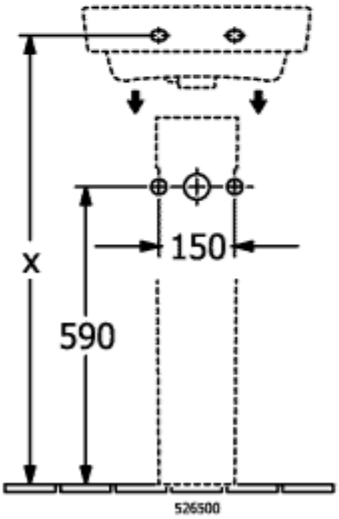

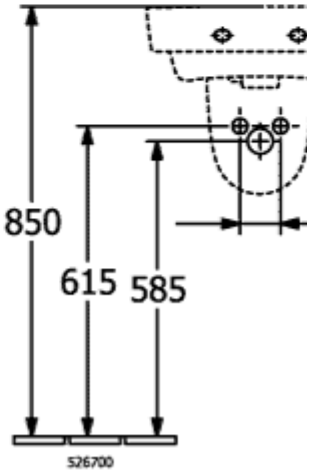

52650001

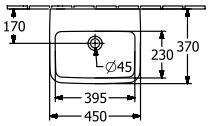

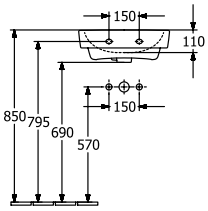

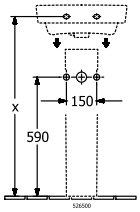

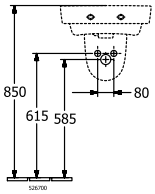

52650001

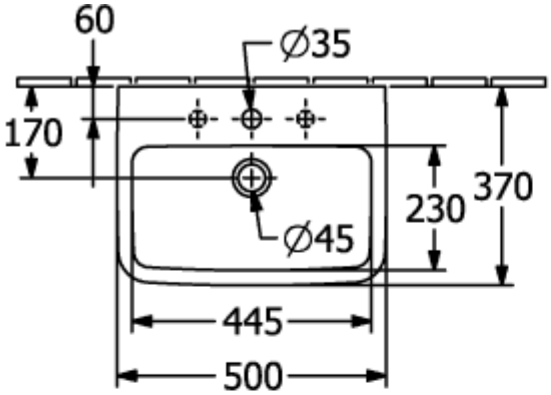

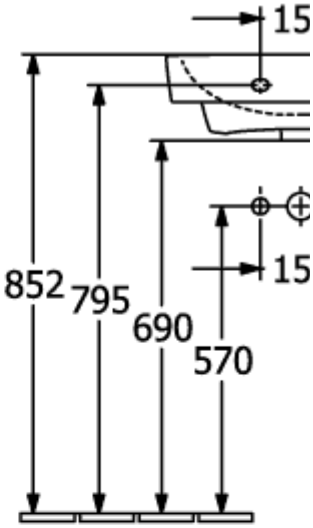

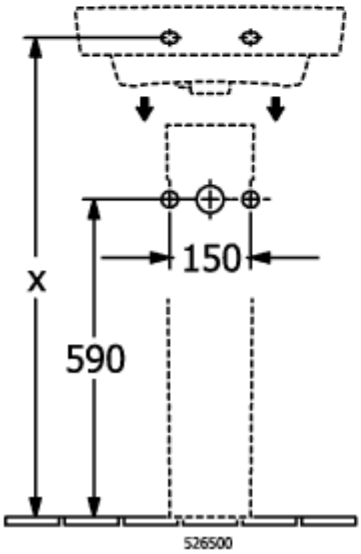

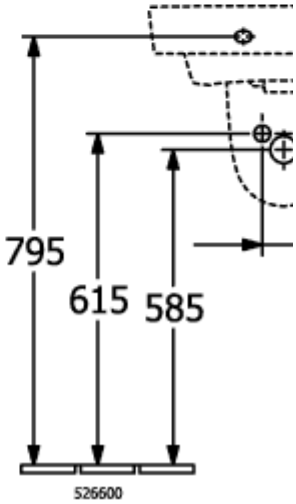

52650001

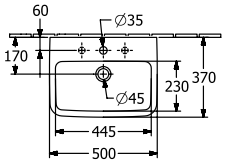

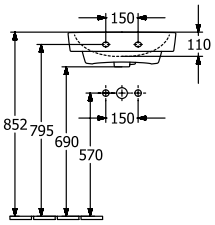

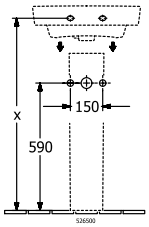

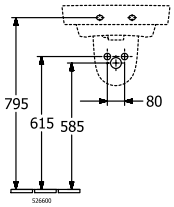

52650001

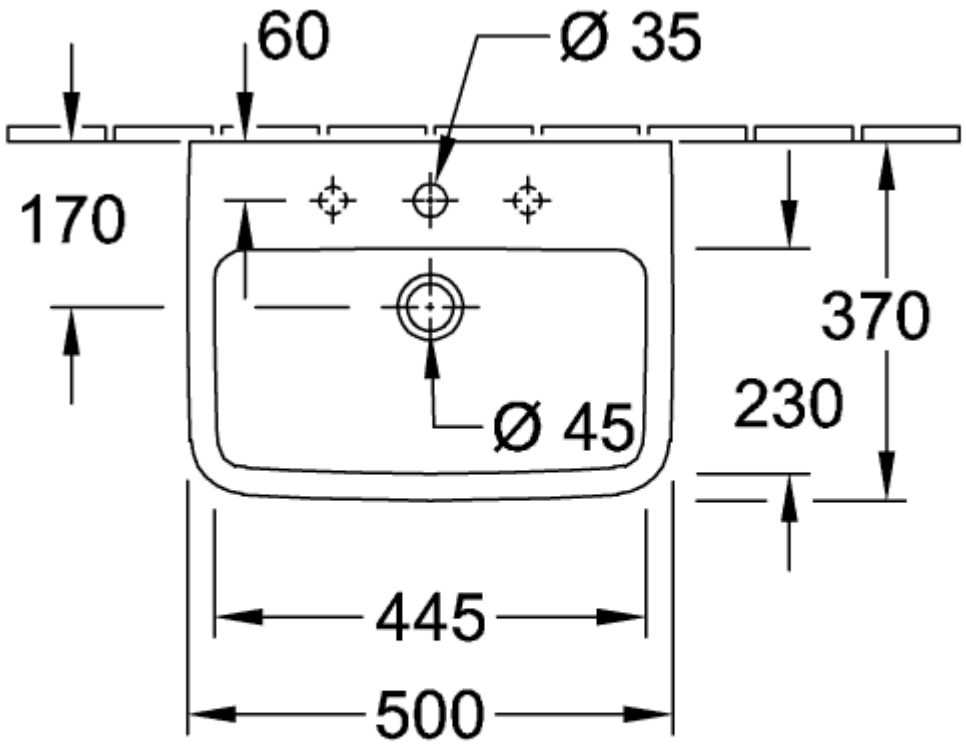
60
Ø 35
170
370
230
Ø 45
445
500

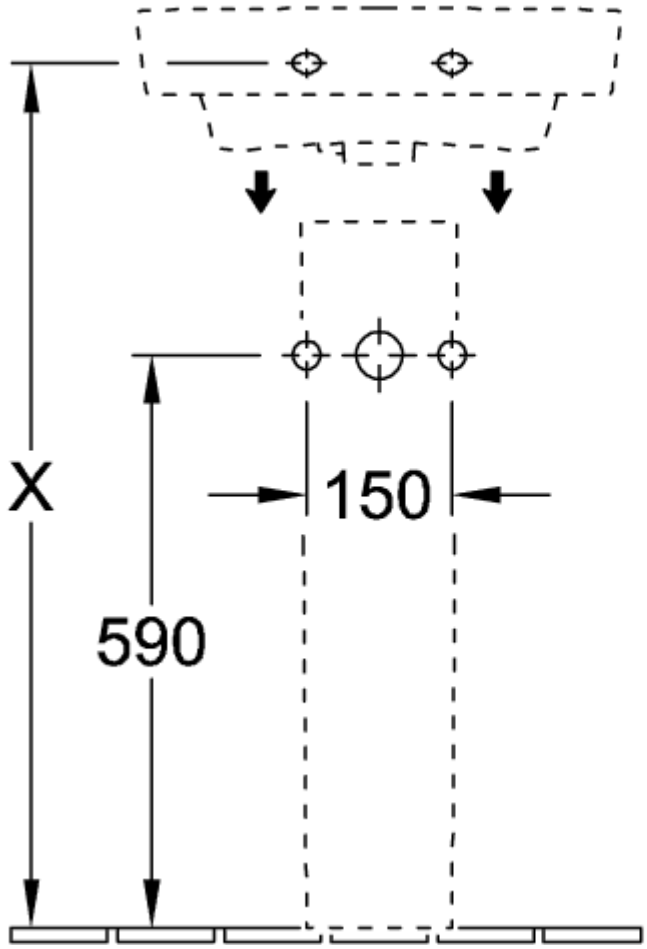
X
150
590

52650001

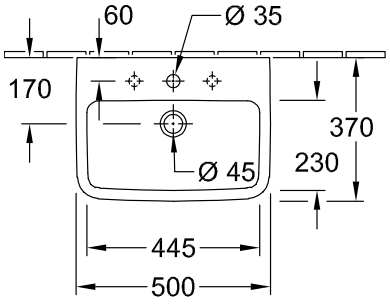
60
Ø 35
170
370
230
Ø 45
445
500

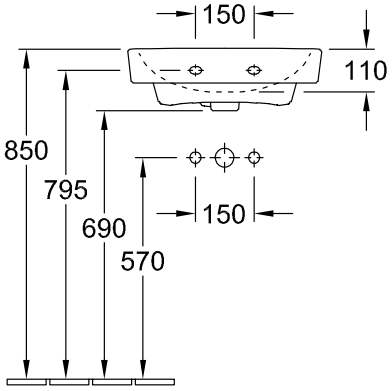
150
110
850
795
690
570
150

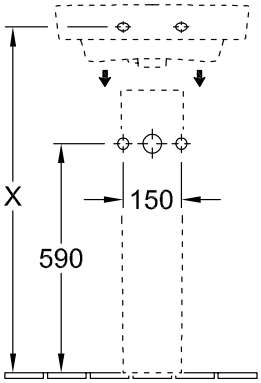
X
150
590

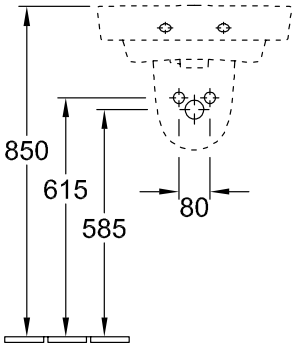
850
615
585
80

52650001

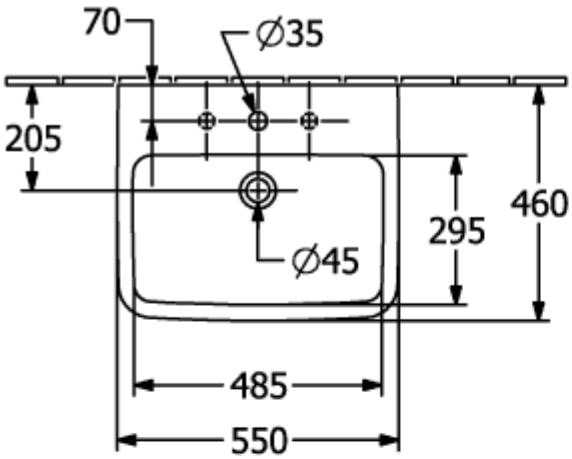

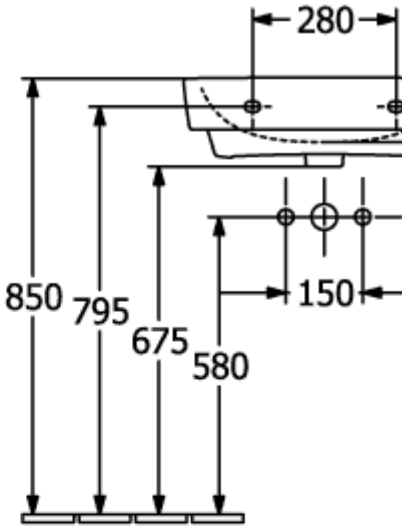

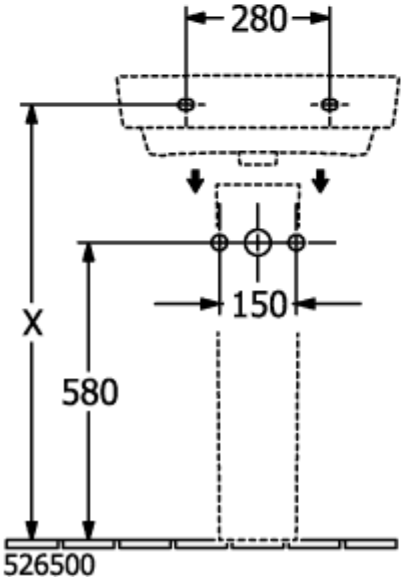

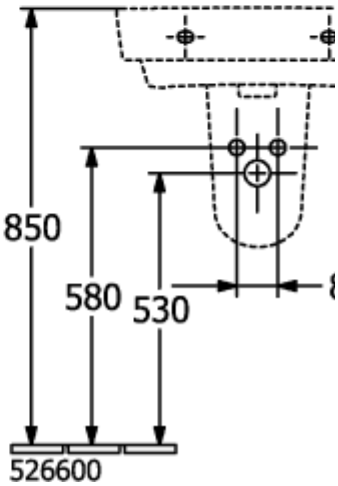

52650001

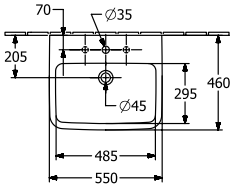

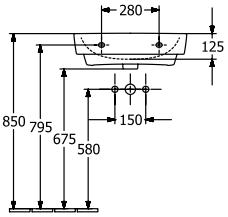

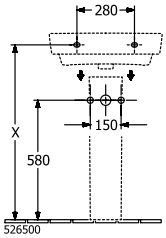

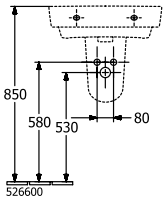

52650001

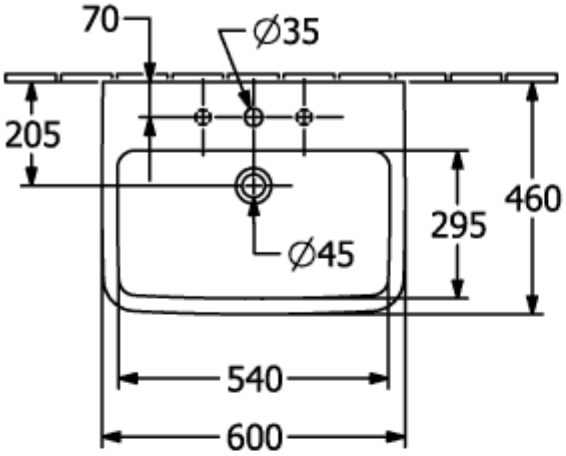

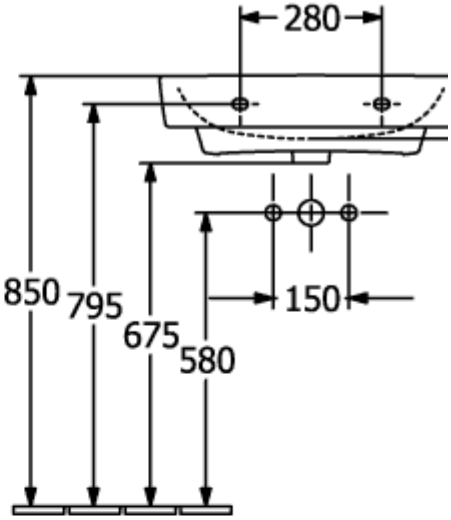

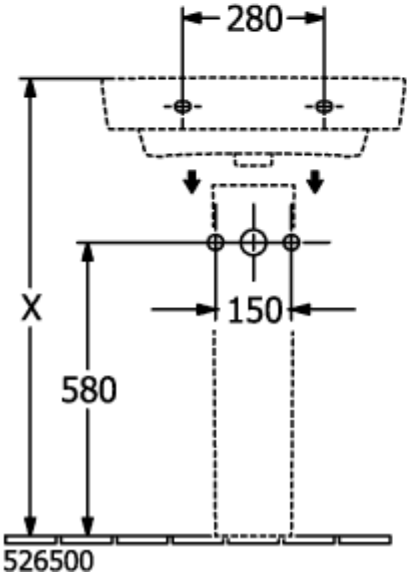

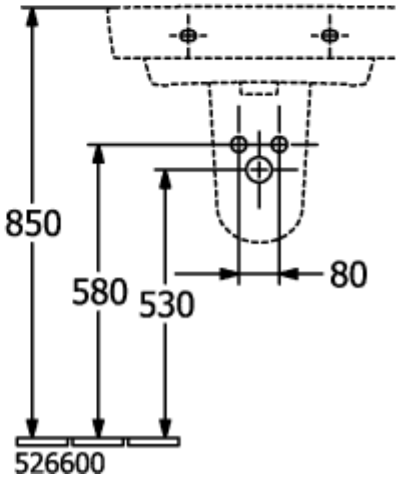

52650001

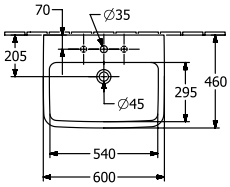

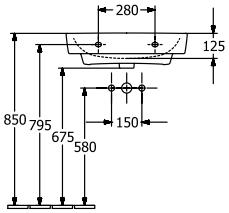

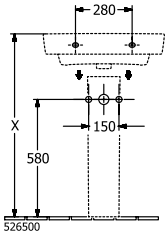

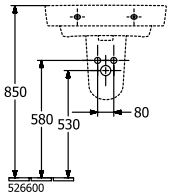

52650001

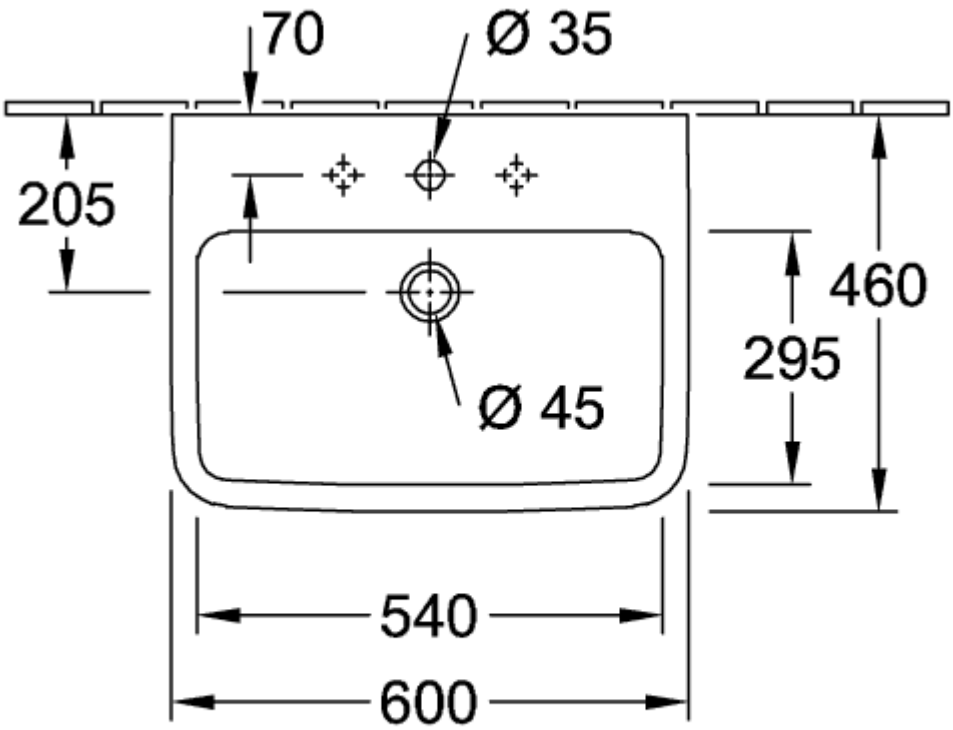
70
Ø 35
205
460
295
Ø 45
540
600

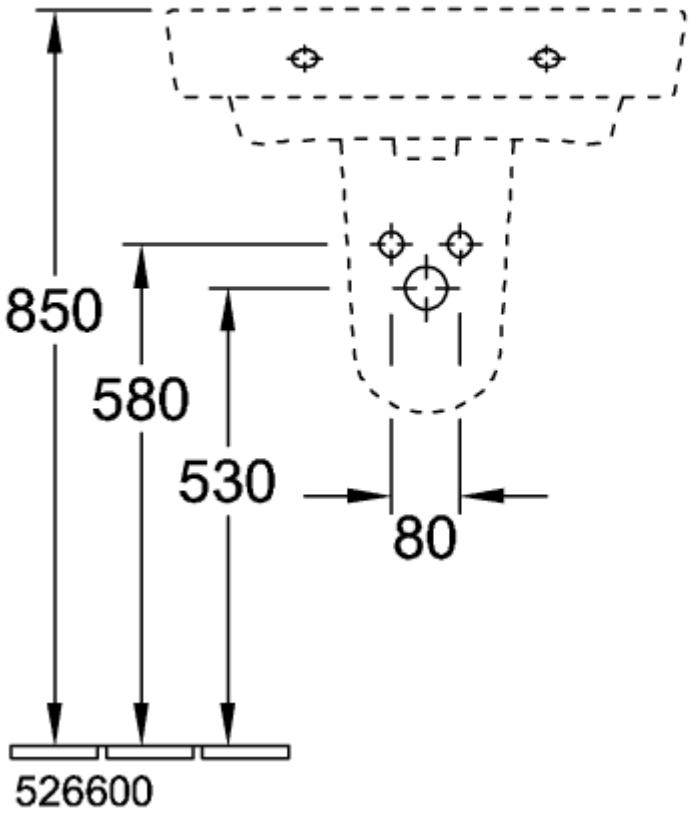
850
580
530
80
526600

52650001

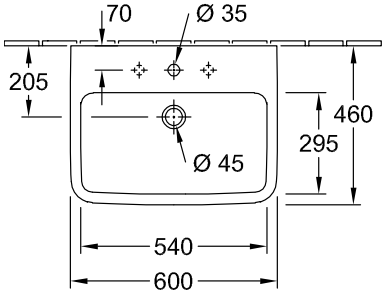

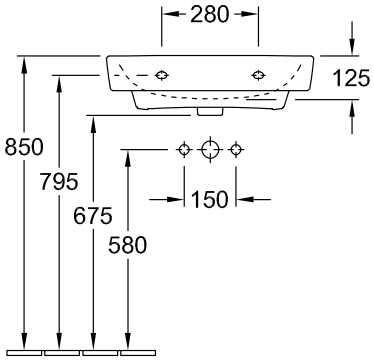

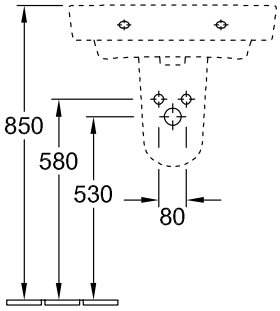

526600

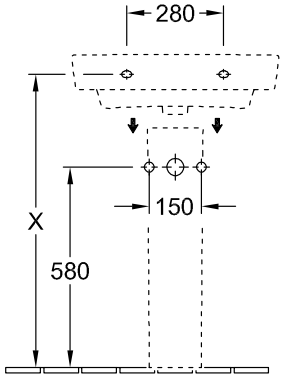

526500

52650001

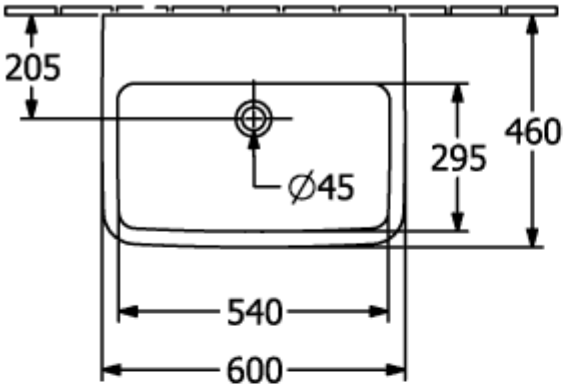

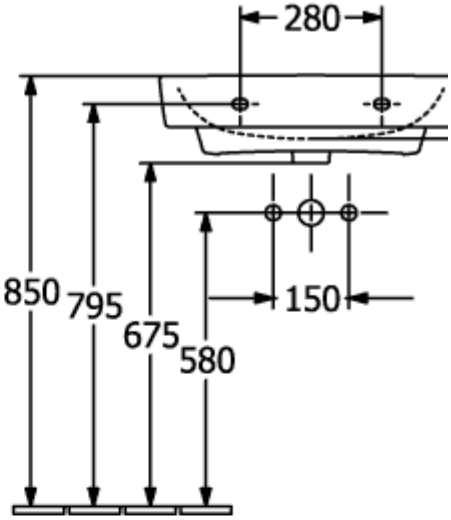

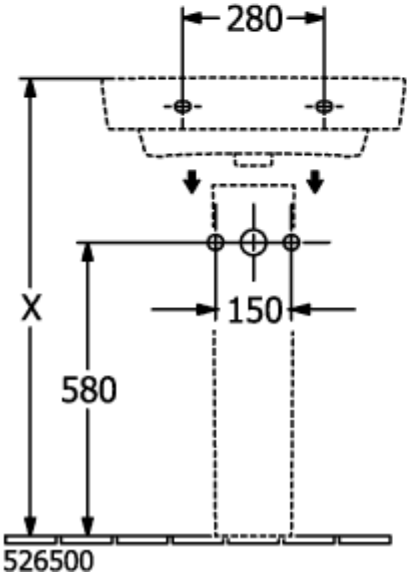

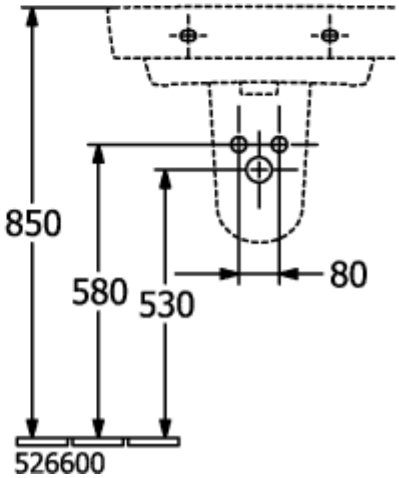

52650001

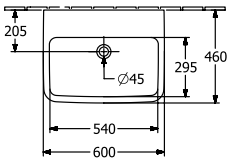

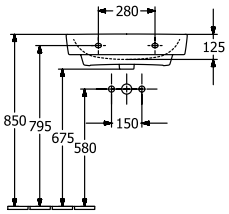

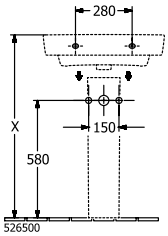

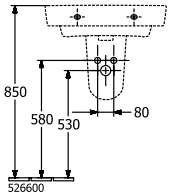

52650001

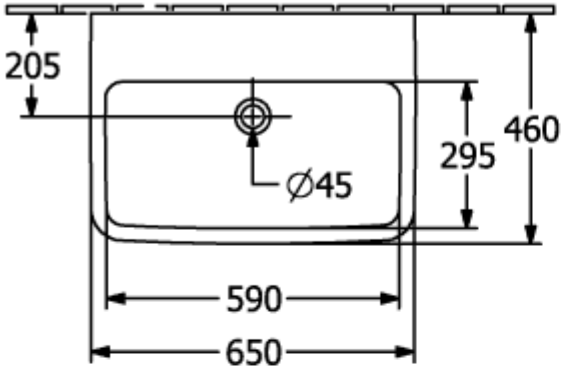

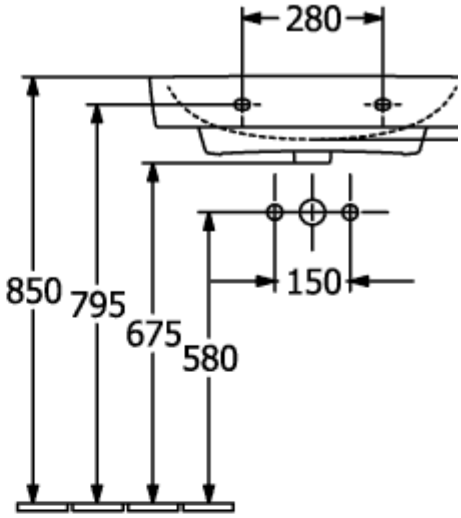

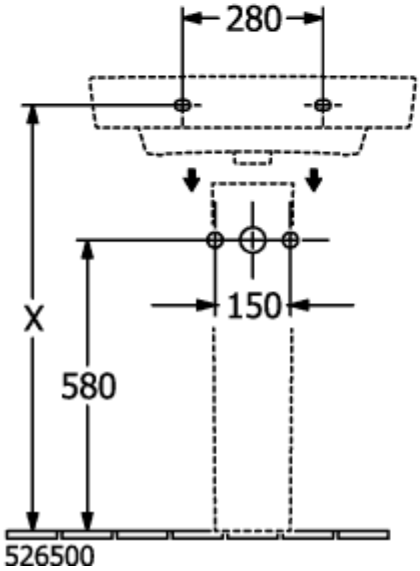

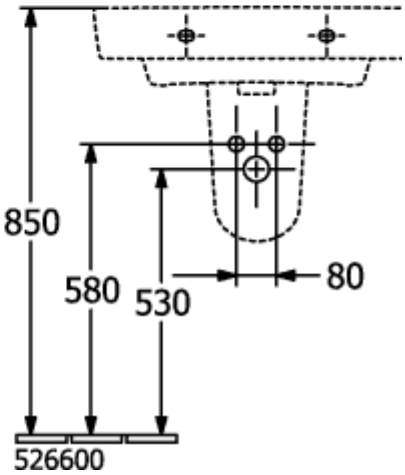

52650001

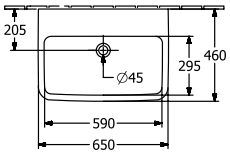

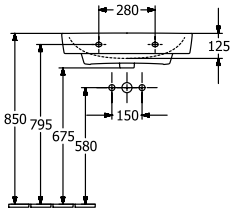

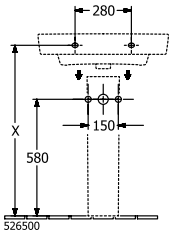

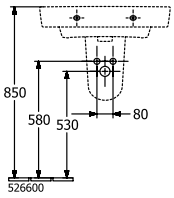

52650001

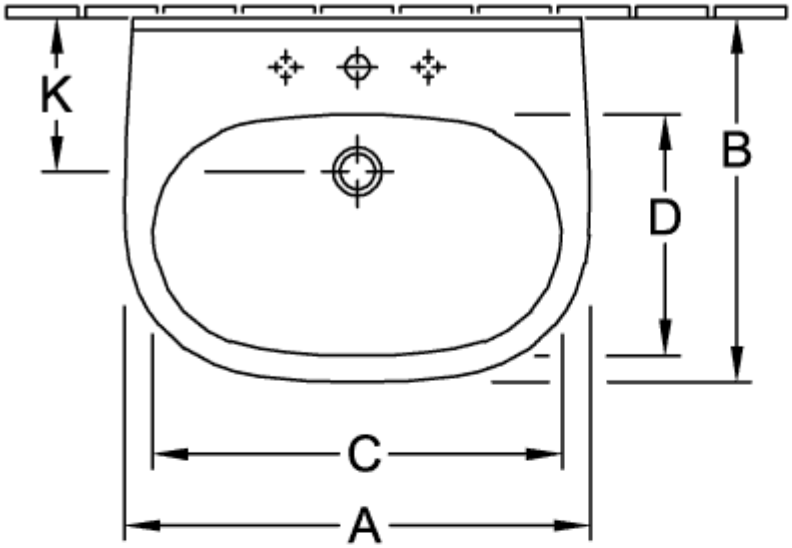

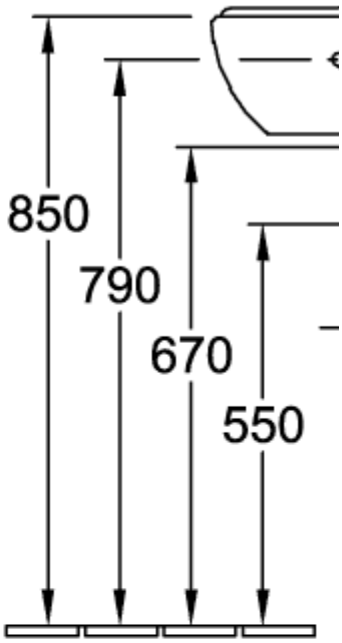

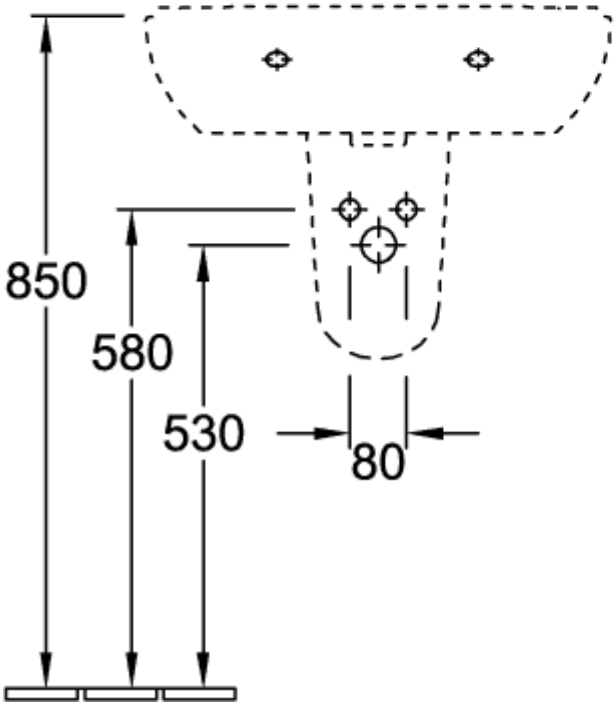

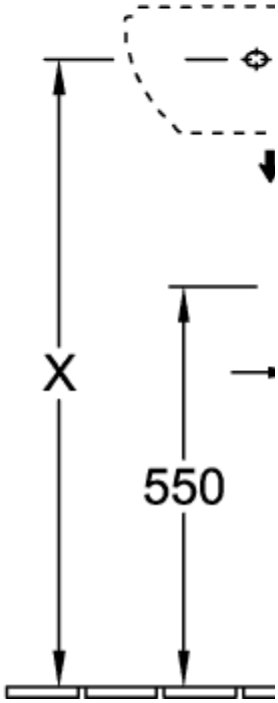

52650001

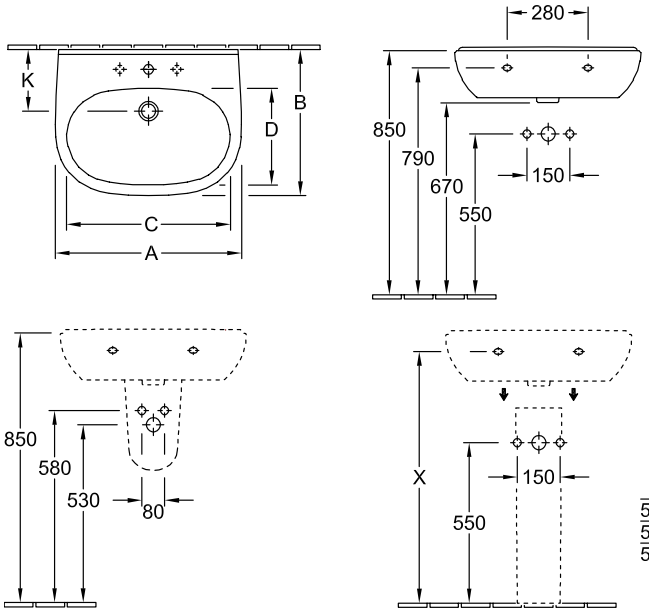

	A	B	C	D
5160 55	550	450	475	280
5160 60	600	490	525	315
5160 65	650	510	565	330

52650001

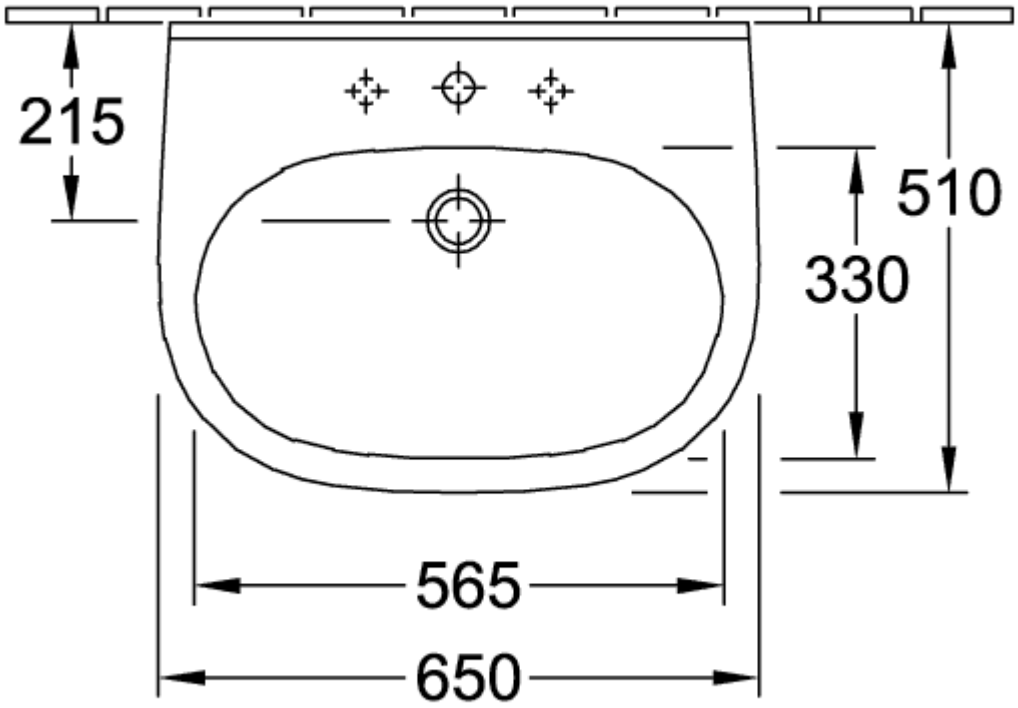

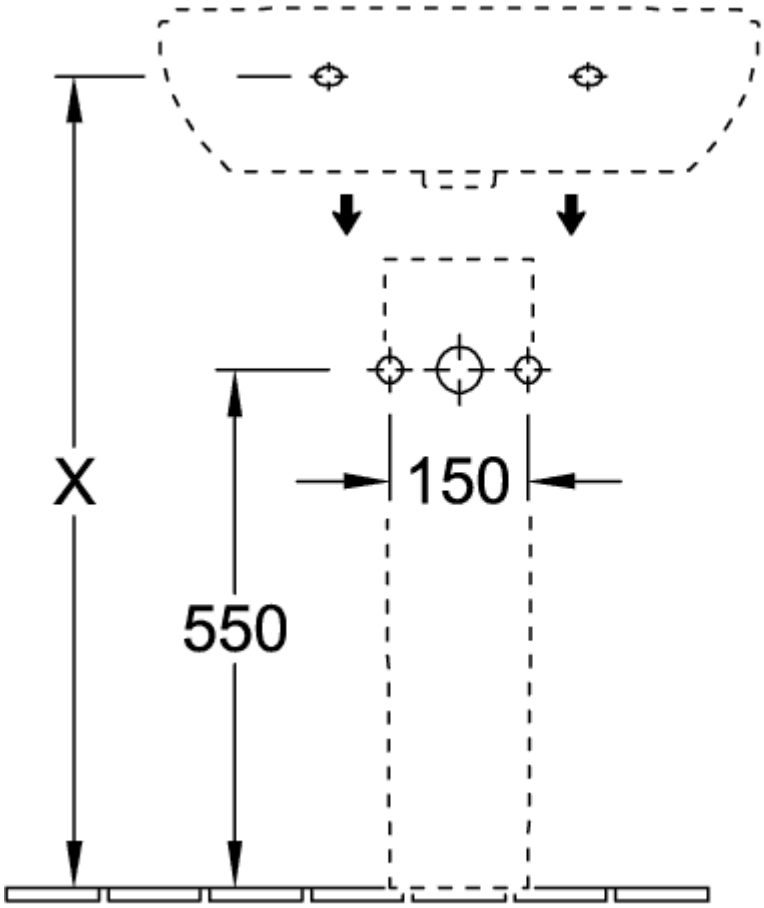

5265 00

52650001

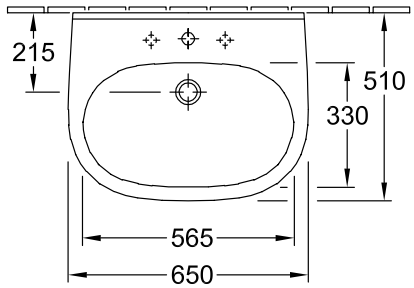

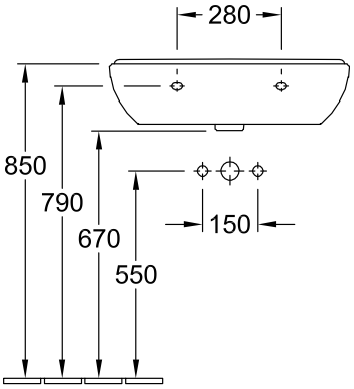

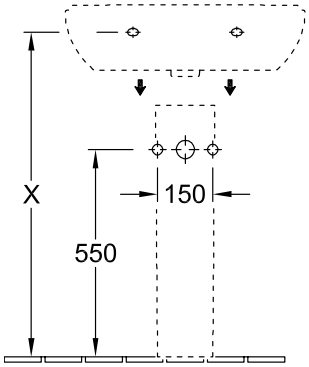

5265 00

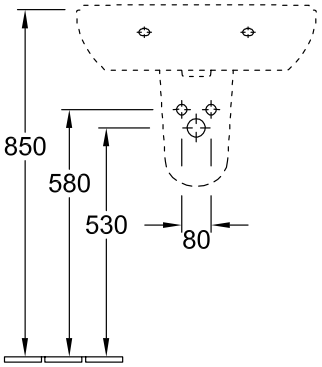

5266 00

52650001

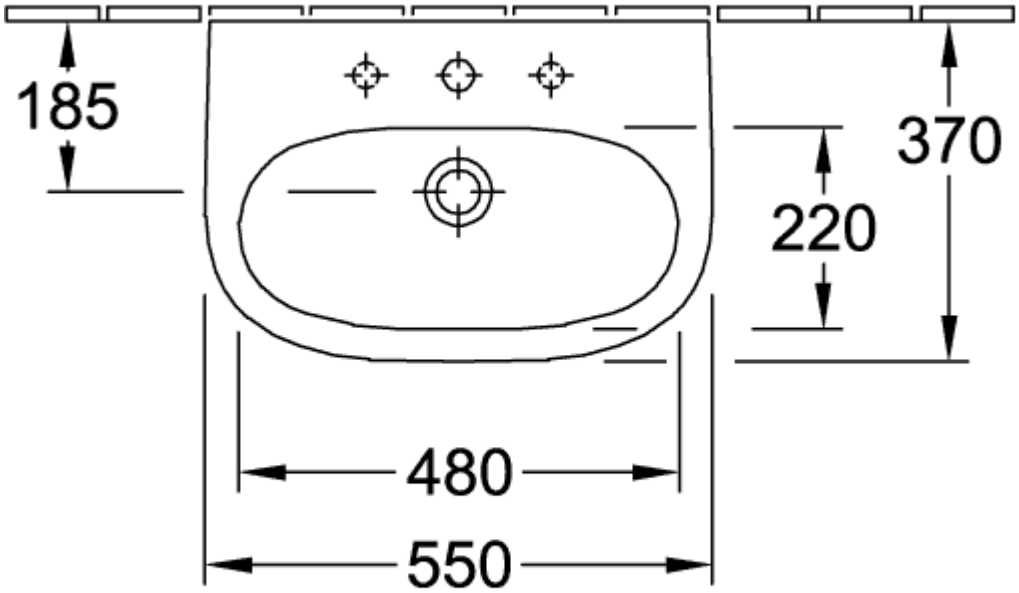
185
370
220
480
550

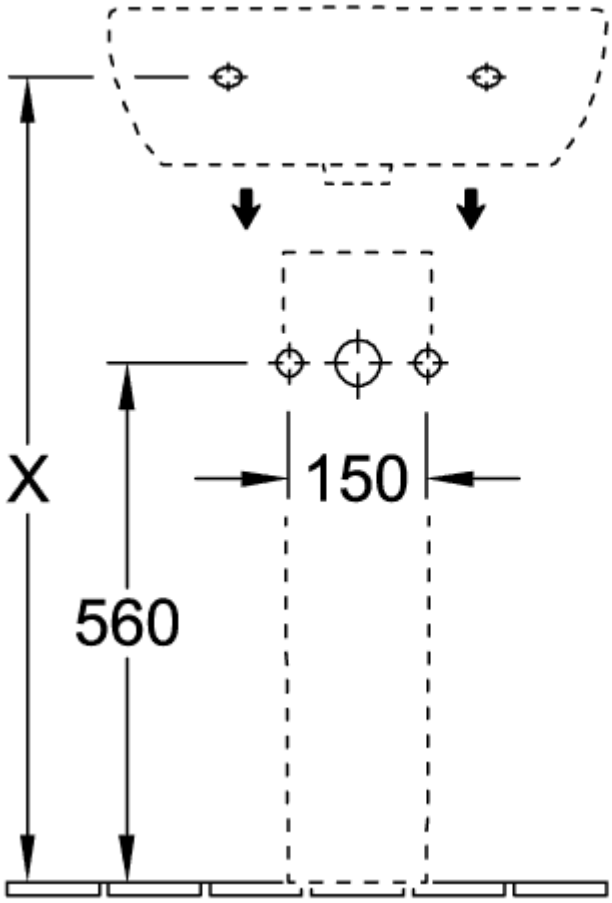
X
150
560

52650001

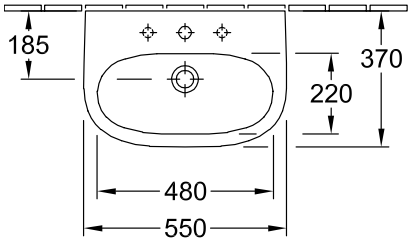

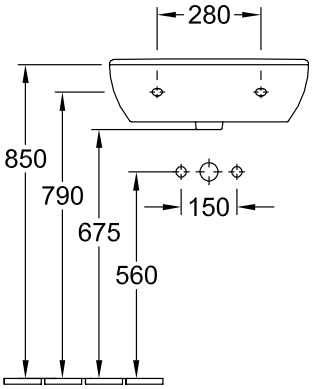

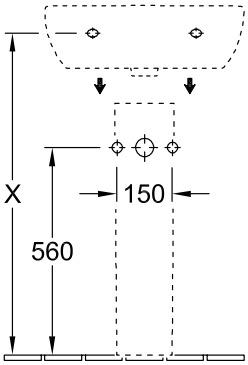

52650001

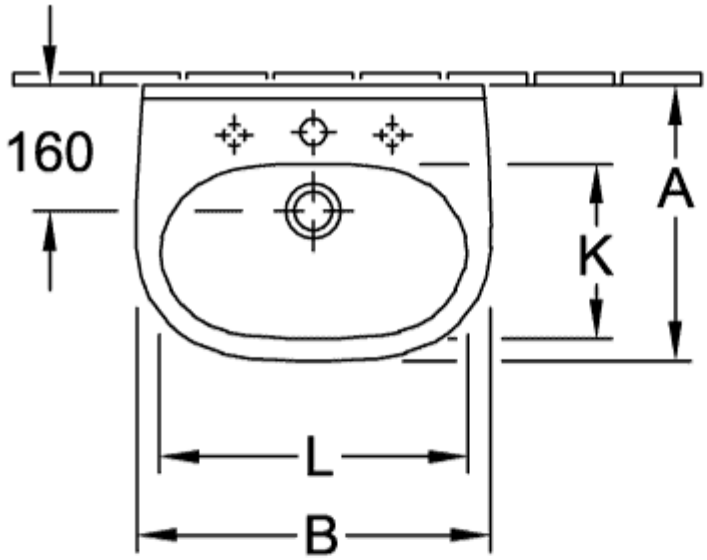

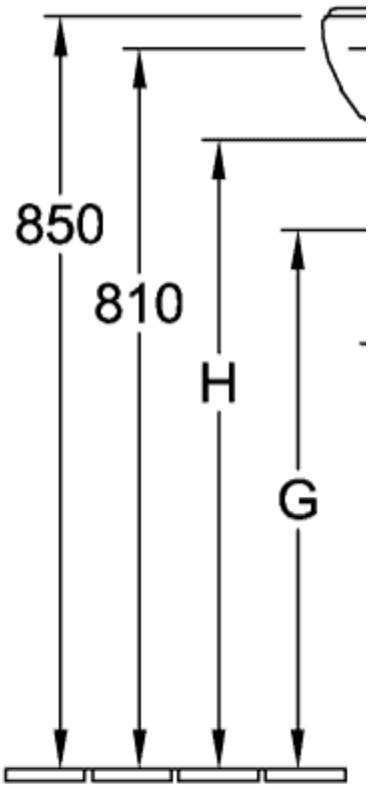

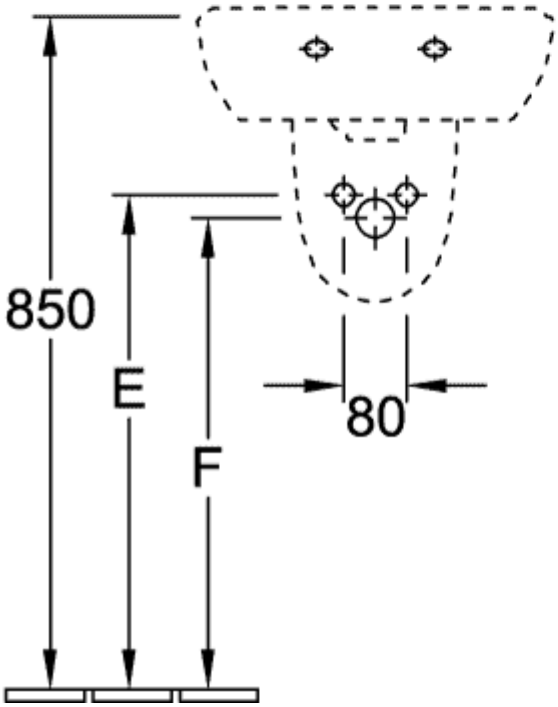

5360 45 / 46 / 47 /
5360 50 / 51 / 52 /

52650001

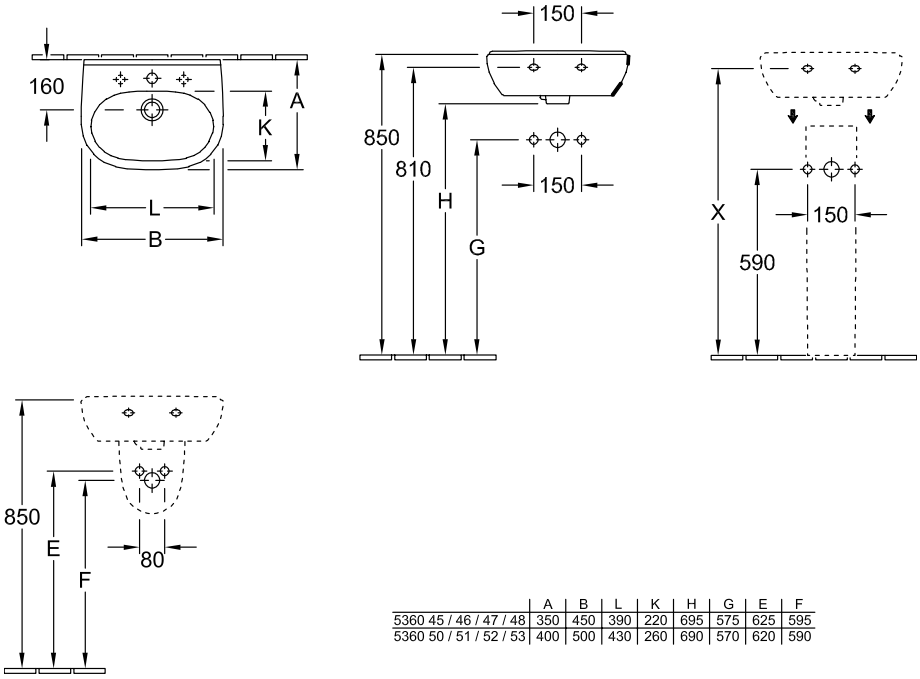

	A	B	L	K	H	G	E	F
5360 45 / 46 / 47 / 48	350	450	390	220	695	575	625	595
5360 50 / 51 / 52 / 53	400	500	430	260	690	570	620	590

52650001

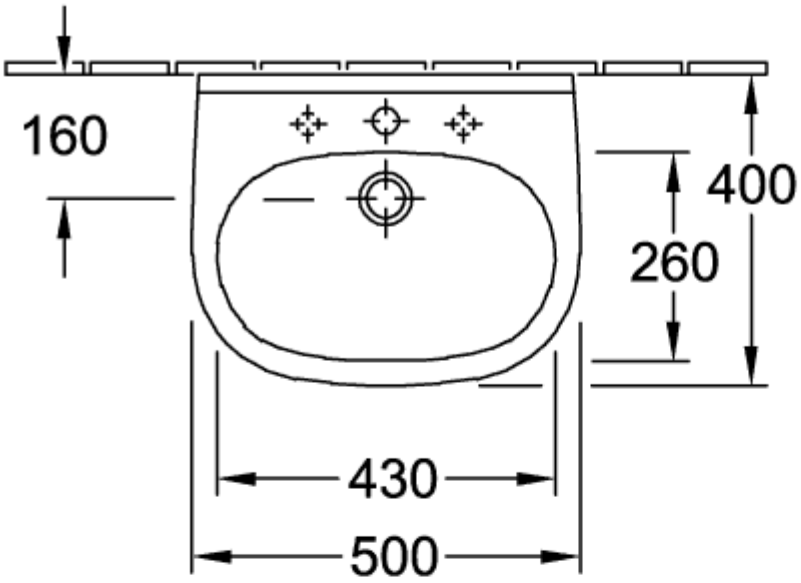

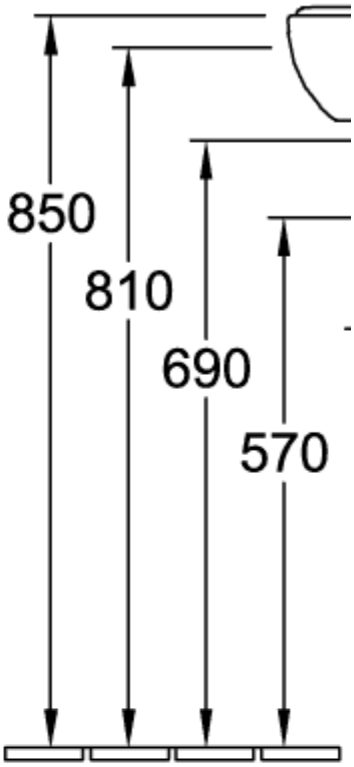

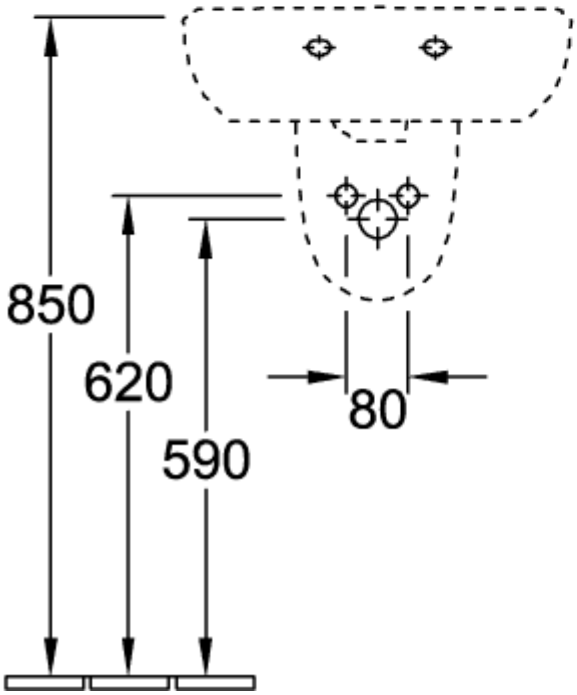

52650001

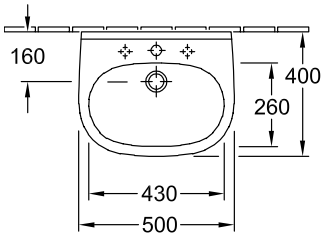
160
400
260
430
500

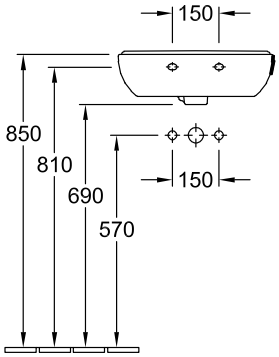
150
850
810
690
570
150

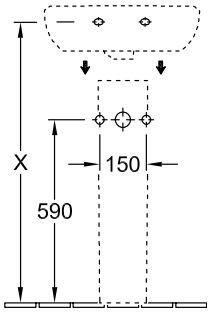
X
150
590

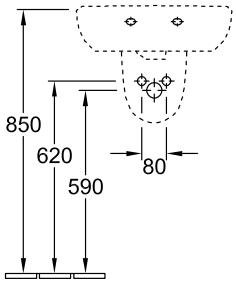
850
620
590
80

52650001

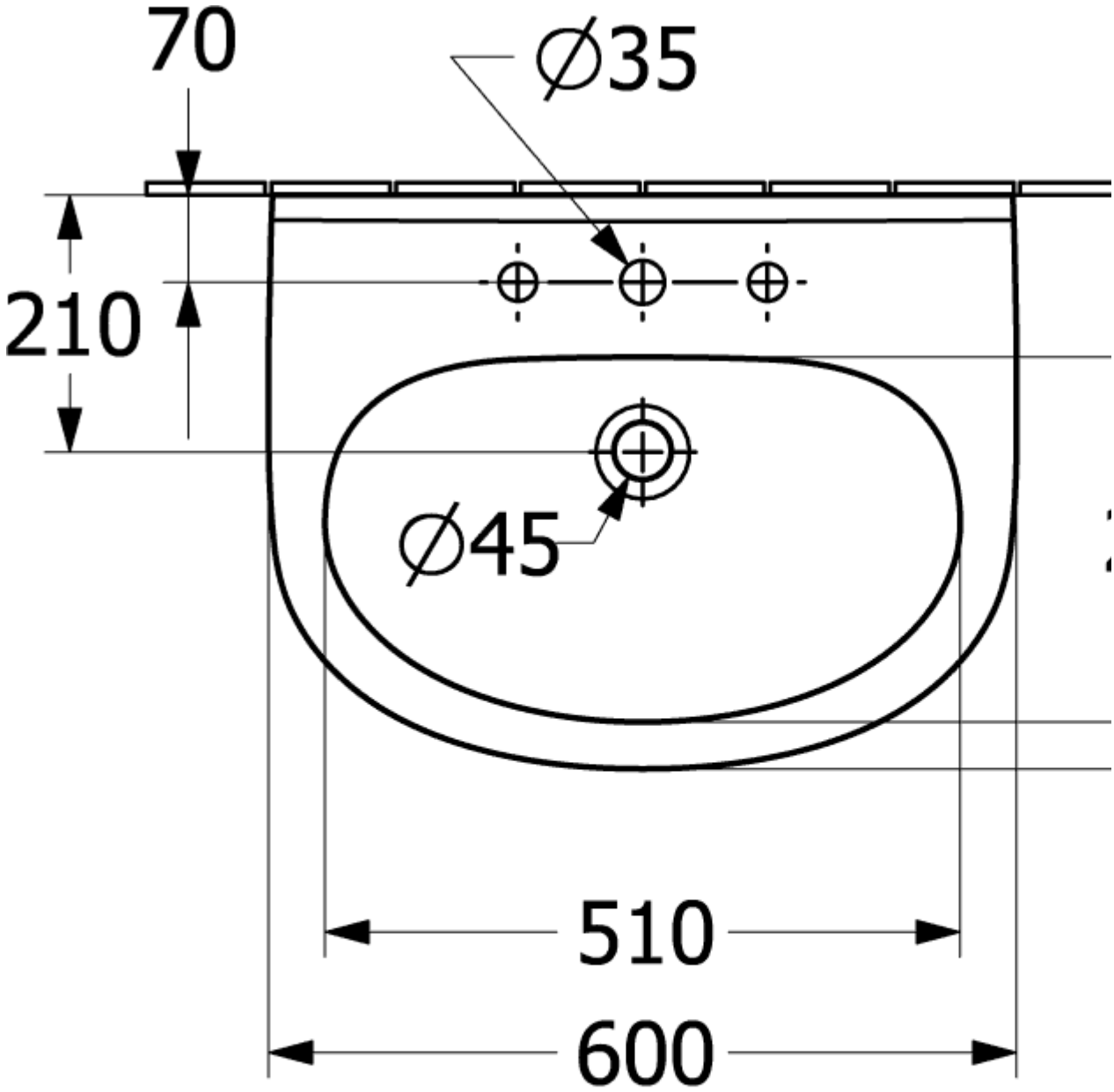
70
∅35
210
∅45
510
600

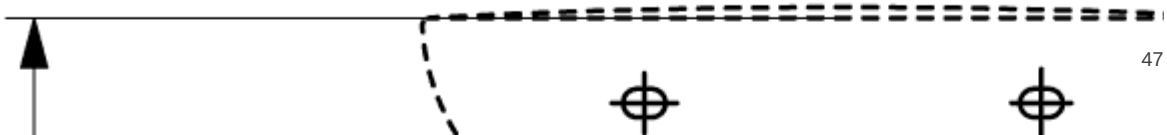

52650001

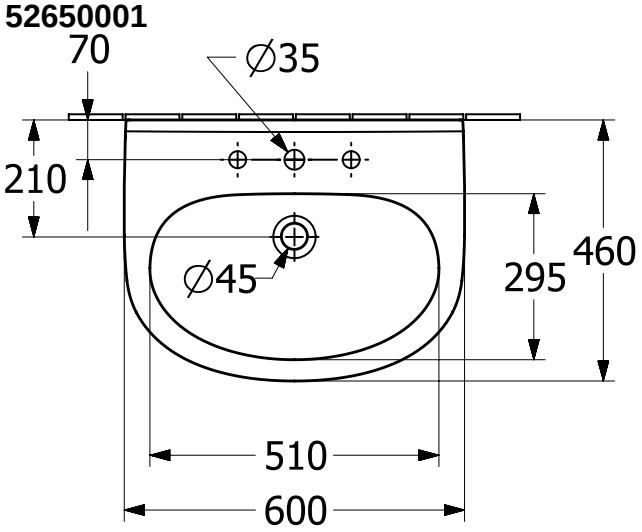
70
∅35
210
460
295
∅45
510
600

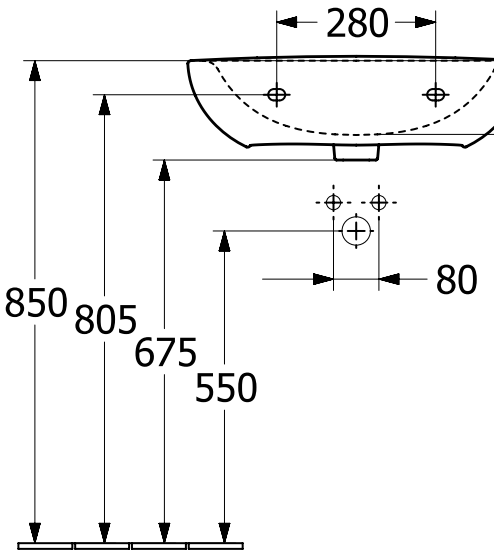
280
850
805
675
550
80

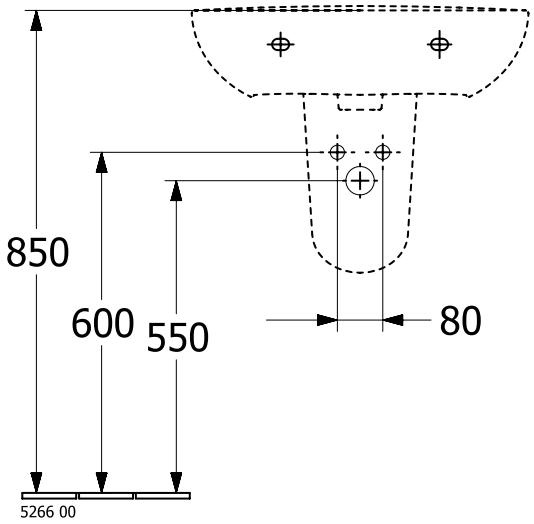
850
600
550
80
5266 00

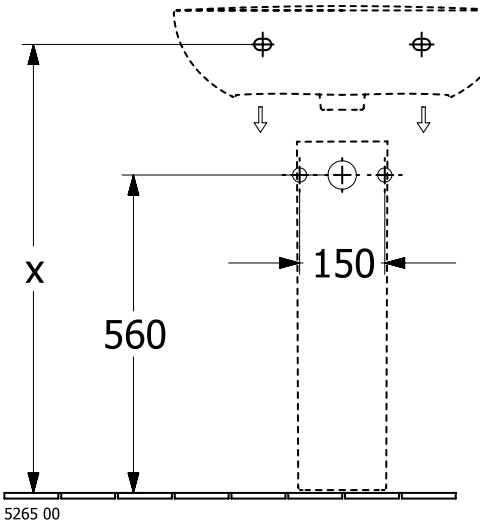
x
560
150
5265 00

52650001

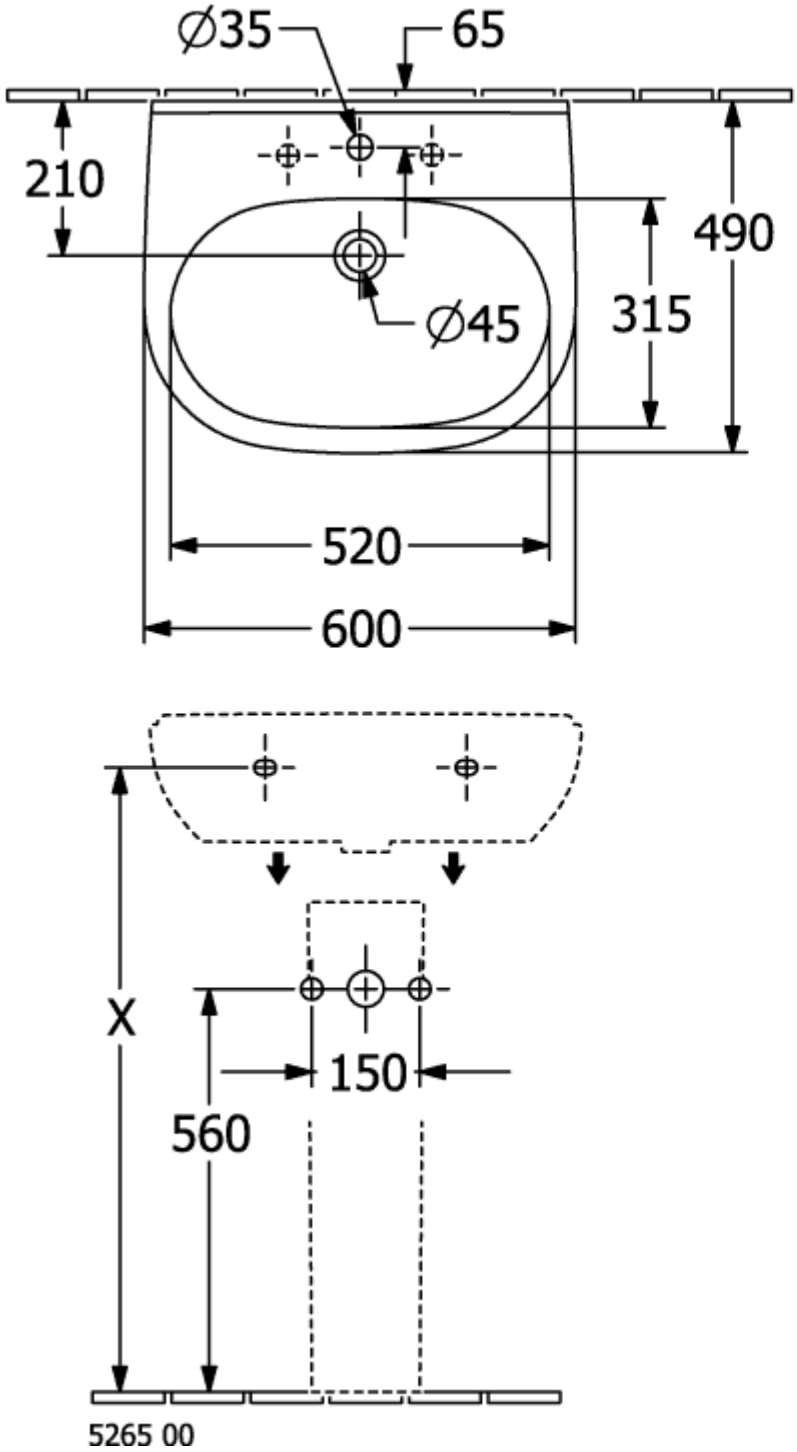
∅35
65
210
490
315
∅45
520
600
X
150
560
5265 00

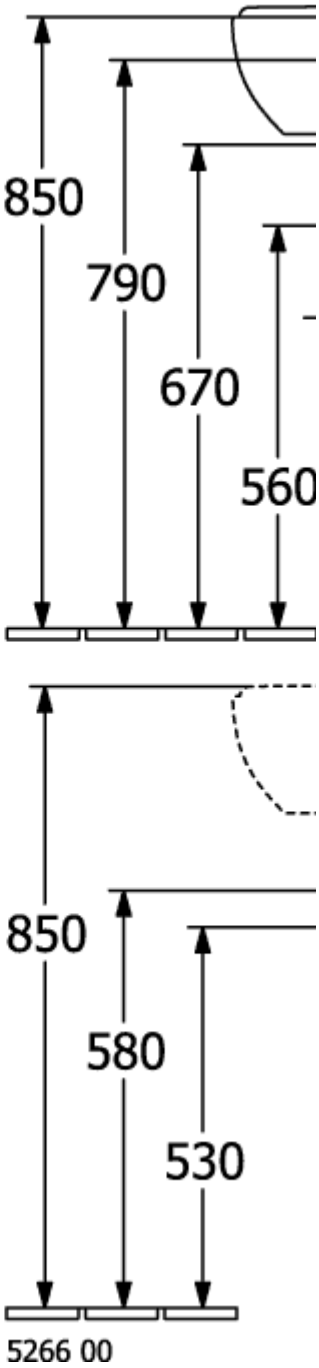
850
790
670
560
850
580
530
5266 00

52650001

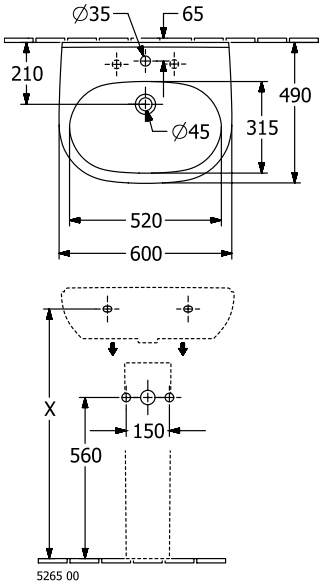

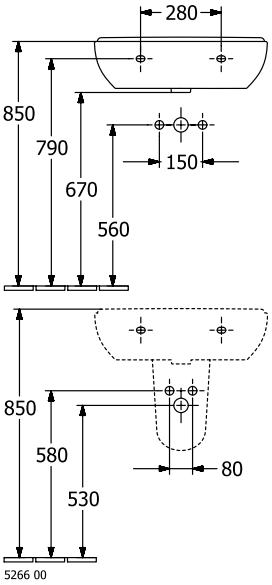

52650001

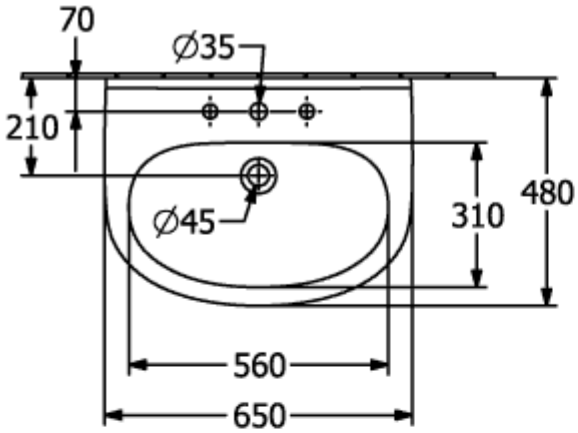

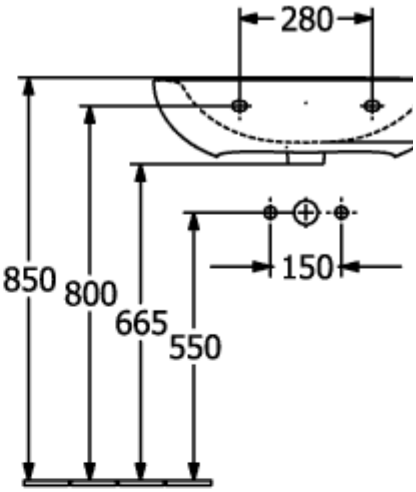

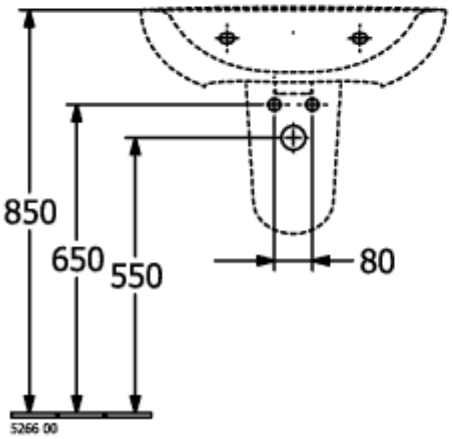

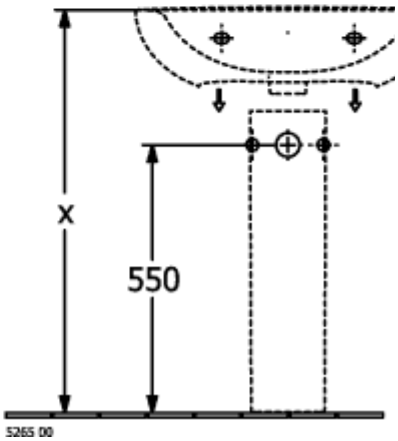

52650001

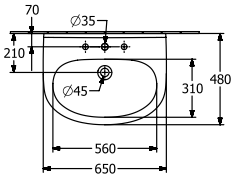
70
∅35
210
∅45
310
480
560
650

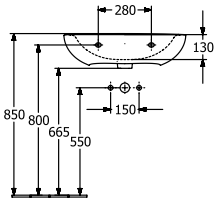
280
130
850
800
665
550
150

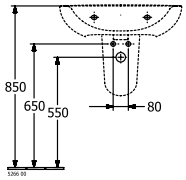
850
650
550
80

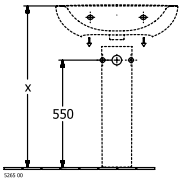
x
550

52650001

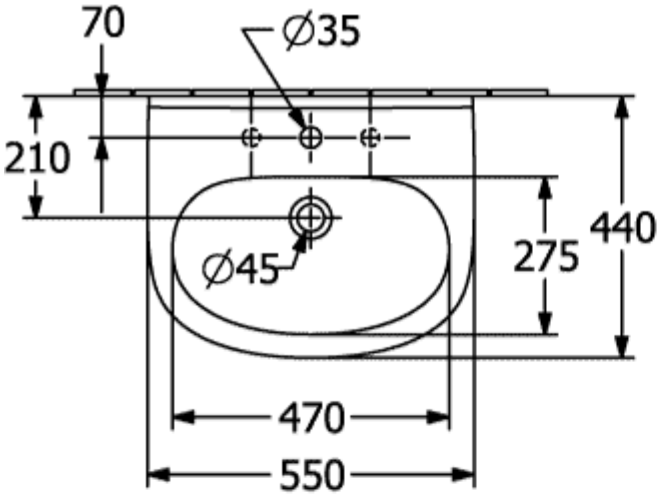
70
Ø35
210
440
275
Ø45
470
550

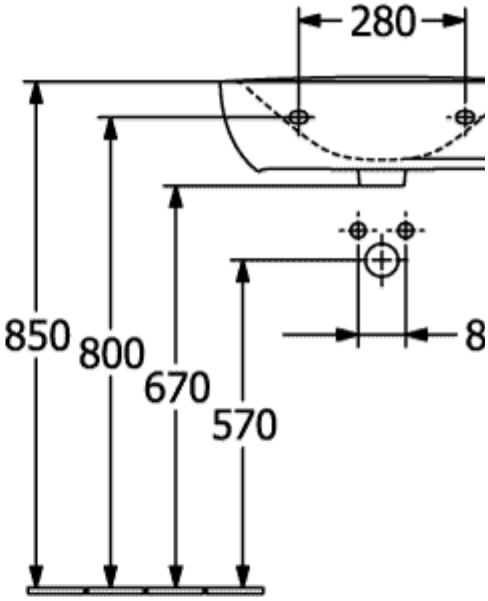
280
850
800
670
570
8

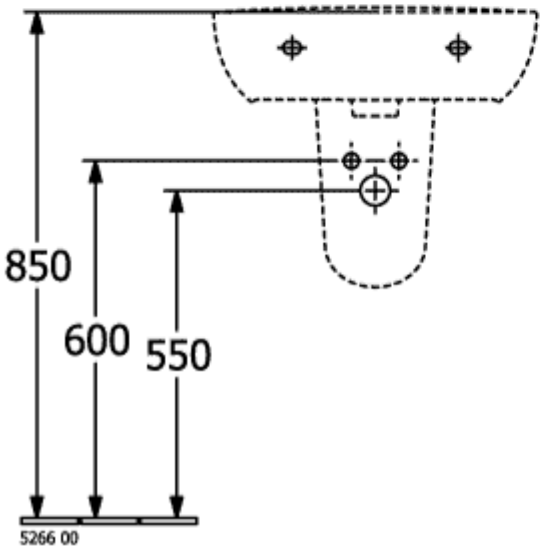
850
600
550
5266 00

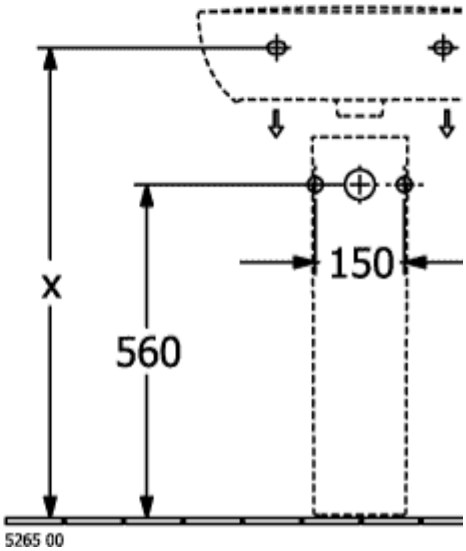
x
560
150
5265 00

52650001

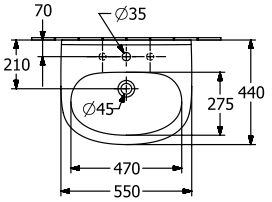
70
∅35
210
440
275
∅45
470
550

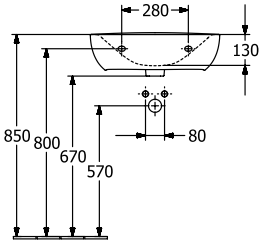
280
130
850
800
670
570
80

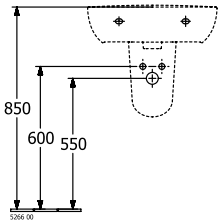
850
600
550
5266 00

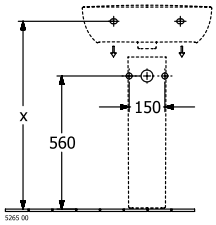
x
560
150
5265 00

52650001

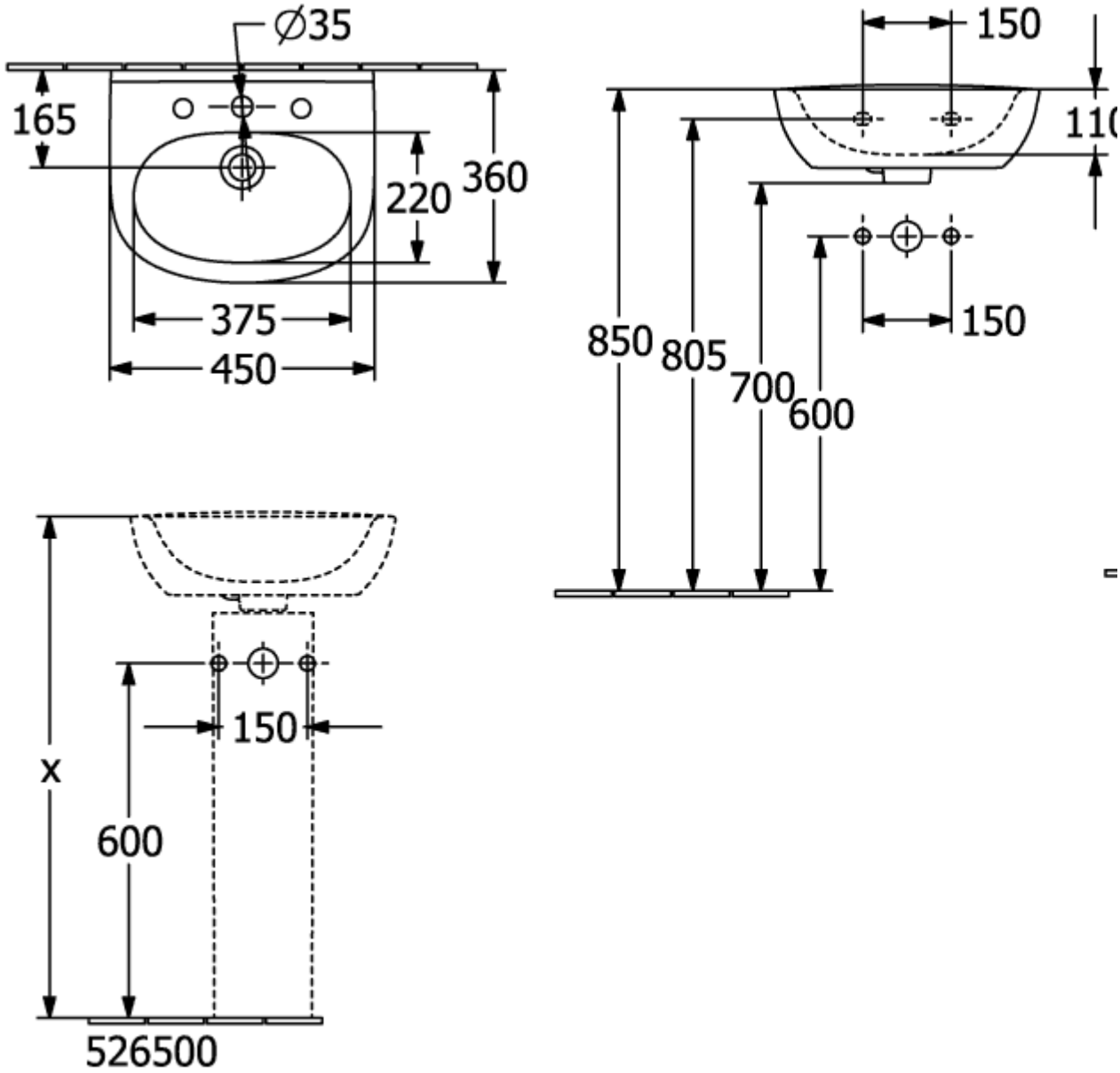
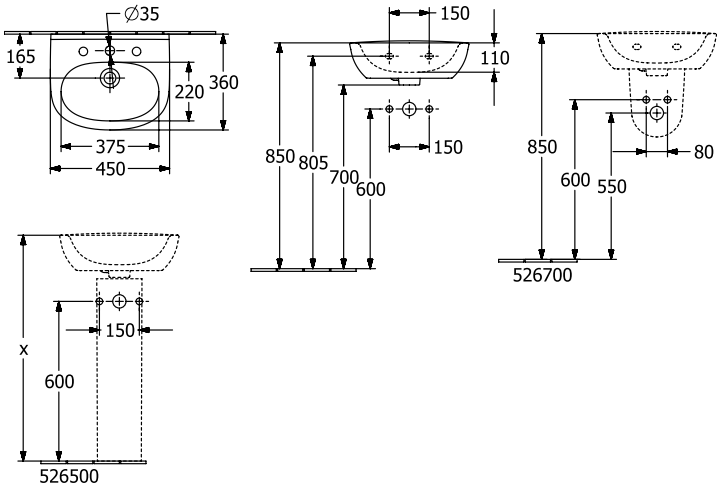
52650001