VICARE WASHBASIN VICARE OVAL

PRODUCT INFORMATION

Article title	Villeroy & Boch ViCare Washbasin ViCare, 555 x 540 x 195 mm, White Alpin AntiBac CeramicPlus, without overflow
Article number	411956T2
Assembly / Assembly type	wall-mounted
Scope of delivery	1 x washbasin
Depth in mm	540
Width in mm	555
Height in mm	195
Interior depth	100
Collection	ViCare
Tap fitting / Tap hole information	Please note: unclosable outlet valve must be used with models without overflow
Suitable for	3-hole mixer, Accessible application
Material	Sanitary ceramics
surface	glossy
Colour name	White Alpin AntiBac CeramicPlus
With overflow	No
Shape	Oval
Colour designation	White Alpin
Antibacterial surface (with AntiBac)	Yes
Easy surface cleaning (CeramicPlus)	Yes
Number of tap holes punched through	1
Number of tap holes pre-drilled	2
Number of bowls	1

TECHNICAL DRAWINGS

411956T2

DE

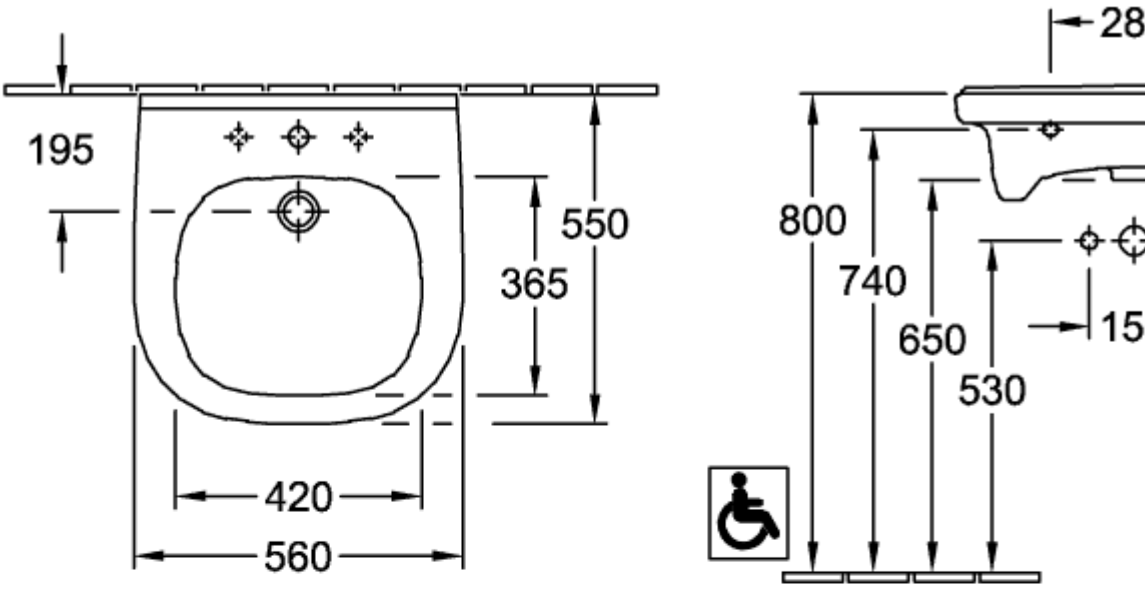

FR+

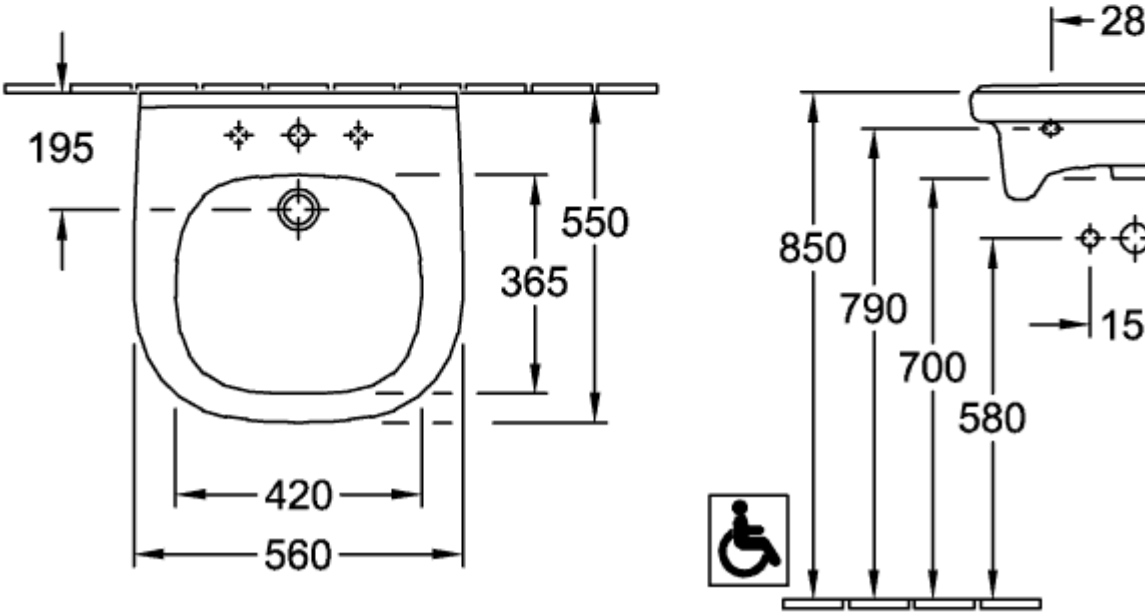

411956T2

DE

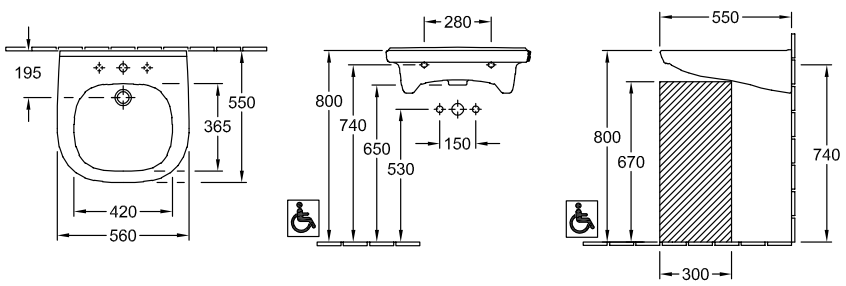

FR+

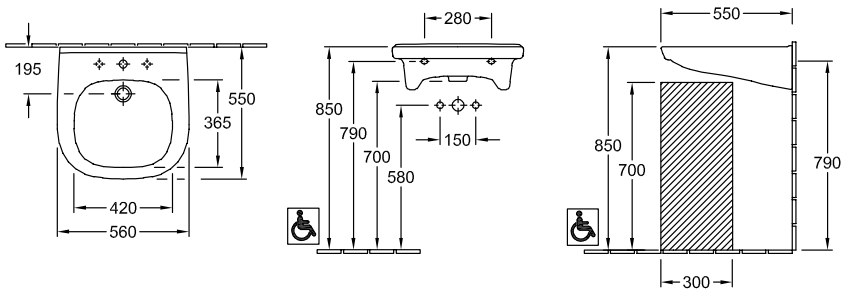

411956T2

DE

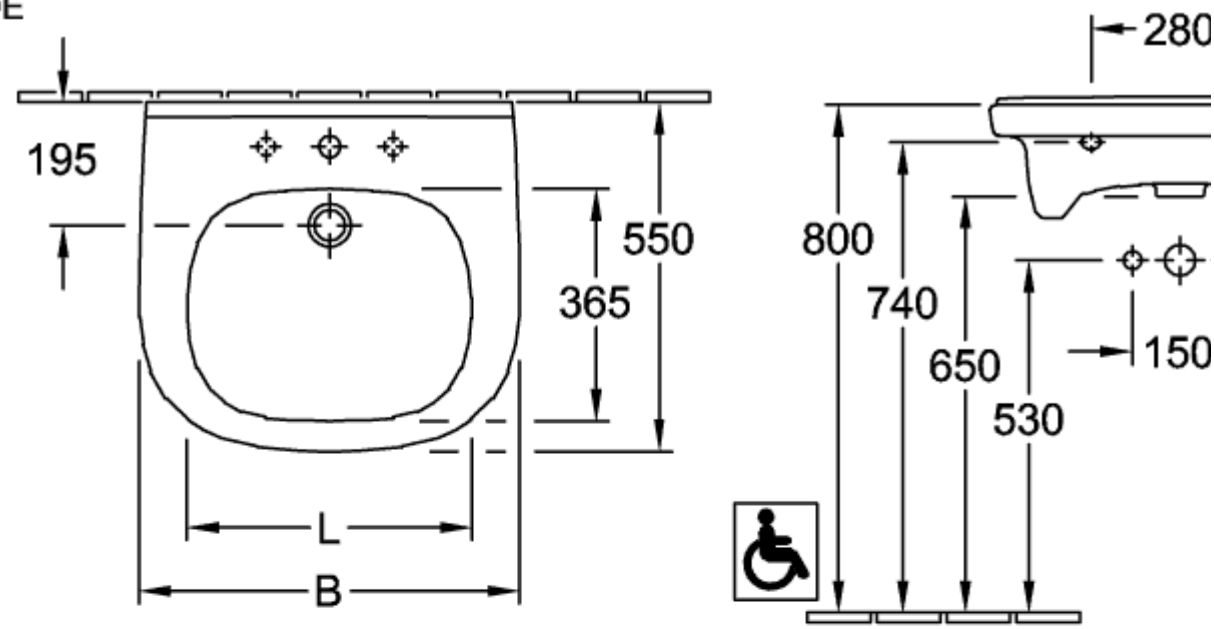

FR+

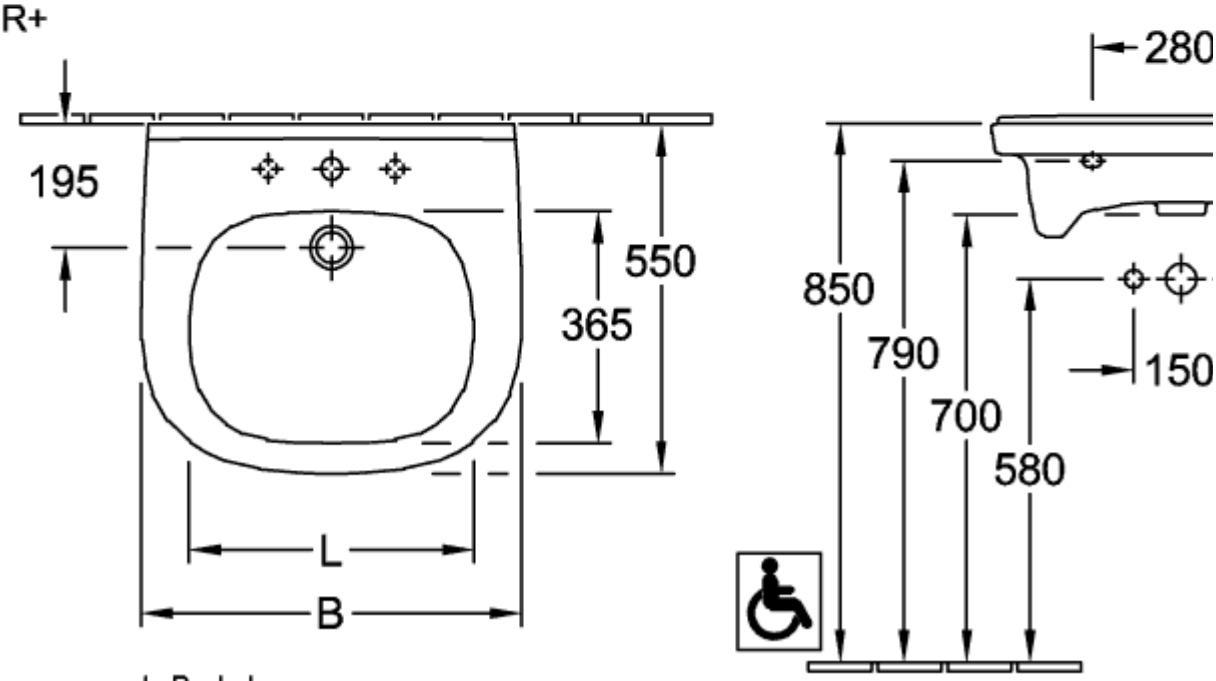

	B	L
4119 55	560	420
4119 60	610	460

411956T2

DE

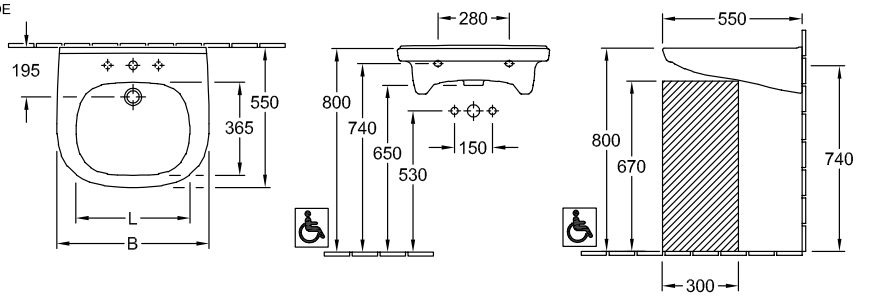

FR+

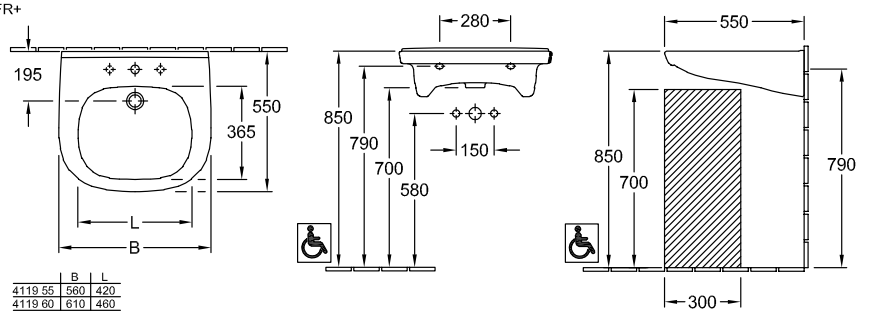

	B	L
4119 55	560	420
4119 60	610	460